ENG

gaSteam - UG

Gas-fired humidifier

USER MANUAL

LEGGI E CONSERVA QUESTE ISTRUZIONI

READ AND SAVE THESE INSTRUCTIONS

NO POWER & SIGNAL CABLES TOGETHER

READ CAREFULLY IN THE TEXT!

gaSteam - UG

+0300122EN - ENG

Up to date version available on

www.carel.com

GENERAL WARNINGS

FAILURE TO CAREFULLY HEED THE WARNINGS SHOWN IN THIS MANUAL COULD LEAD TO FIRE OR EXPLOSION AND CONSEQUENT DAMAGE TO PROPERTY, INJURY OR DEATH.

- **Do not store or use petrol or other flammable vapours and liquids in the vicinity of this or other appliances.**

IF YOU SMELL GAS:

1. **Do not attempt to switch on any appliance;**
2. **Do not touch any electrical switches; do not use telephones in the building;**
3. **Call the gas supplier immediately from a neighbour's phone. Follow the instructions given by the gas supplier;**
4. **If you cannot contact the gas supplier, call the fire brigade;**
   - **Installation and maintenance must be performed by a qualified installer, service centre or gas supplier.**

CAREL Industries humidifiers are advanced products, whose operation is specified in the technical documentation supplied with the product or can be downloaded, even prior to purchase, from the website www.carel.com. Each CAREL product, in relation to its advanced level of technology, requires setup/configuration/programming to be able to operate in the best possible way for the specific application. Failure to complete such operations, which are required/indicated in the user manual, may cause the final product to malfunction; CAREL accepts no liability in such cases. The customer (manufacturer, developer or installer of the final equipment) accepts all liability and risk relating to the configuration of the product in order to reach the expected results in relation to the specific final installation and/or equipment. CAREL may, based on specific agreements, act as a consultant for the installation/commissioning/use of the unit, however in no case does it accept liability for the correct operation of the humidifier and the final installation if the warnings or suggestions provided in this manual or in other product technical documents are not heeded. In particular, as well as observing the above warnings and suggestions, the following warnings must be observed for correct use of the product:

ELECTRIC SHOCK HAZARD: the humidifier contains live electrical components**.** Disconnect the mains power supply before accessing inside parts or during maintenance and installation.
WATER LEAK HAZARD: the humidifier automatically and constantly fills/drains certain quantities of water. Malfunctions in the connections or in the humidifier may cause leaks.
BURN HAZARD: the humidifier contains high temperature components and delivers steam a 100°C/ 212°F.

In the event where there is no demand for steam production for a period exceeding 24 hours, the unit will automatically empty the boiler, so as to avoid stagnation of the water inside. Environmental conditions, fuel and power supply voltage must all comply with the specified values. All other uses and modifications made to the appliance that are not authorised by the manufacturer are considered incorrect. Liability for injury or damage caused by the incorrect use of the appliance lies exclusively with the user. Please note that the appliance is connected to the gas mains, contains live electrical devices and hot surfaces. All service and/or maintenance operations must be performed by specialist and qualified personnel who are aware of the necessary precautions and are capable of performing the operations correctly and in accordance with the safety standards and legislation in force, with specific reference to:

1. Italian law no. 1083/71: "Safety standards relating to the use of gaseous fuel";
2. Italian law no. 46/90: "Safety standards relating to systems in buildings";
3. Italian Presidential Decree no. 447 of 6 December 1991: "Regulations for the enforcement of law no. 46, dated March 5, 1990, on safety relating to systems in buildings";
4. Italian law no. 10/91: "Regulations for the enforcement of the national plan for energy savings and the development of renewable sources of energy"

Adjustment of all units (covered by UL-998) from operation on natural gas (factory setting) to LPG must only be carried out by Carel personnel or Carel service.

CAUTION

The installation of the product must include an earth connection, using the special yellow-green terminal available in the humidifier.

Caution:

- Disconnect the appliance from the mains power supply before accessing any internal parts.
- Environmental and power supply conditions must conform to the values specified on the product rating labels.
- The product is designed exclusively to humidify rooms either directly or through distribution systems (ducts).
- Only qualified personnel who are aware of the necessary precautions and able to perform the required operations correctly may install, operate or carry out technical service on the product.
- Only water with the characteristics indicated in this manual must be used for steam production.
- Only water with the characteristics indicated in this manual must be used to produce the spray.
- All operations on the product must be carried out according to the instructions provided in this manual and on the labels applied to the product. Any uses or modifications that are not authorised by the manufacturer are considered improper. CAREL declines all liability for any such unauthorised use.
- Do not attempt to open the appliance in any way other than described in the manual.
- Observe the standards in force in the place where the humidifier is installed.
- The appliance is not intended for use by persons (including children) with reduced physical, sensory or mental capabilities, or lack of experience and knowledge, unless they have been given supervision or instruction concerning use of the appliance by a person responsible for their safety.
- Do not install and use the product near objects that may be damaged when in contact with water (or condensate). CAREL declines all liability for direct or indirect damage following water leaks from the humidifier.
- Do not use corrosive chemicals, solvents or aggressive detergents to clean the inside and outside parts of the humidifier, unless specifically indicated in the user manual.
- Do not drop, hit or shake the humidifier, as the inside parts and the linings may be irreparably damaged,

CAREL adopts a policy of continual development. Consequently, CAREL reserves the right to make changes and improvements to any product described in this document without prior warning. The technical specifications shown in the manual may be changed without prior warning. The liability of CAREL in relation to its products is specified in the CAREL general contract conditions, published on the website www.carel.com and/or by specific agreements with customers; specifically, to the extent where allowed by applicable legislation, in no case will CAREL, its employees or subsidiaries/affiliates be liable for any lost earnings or sales, losses of data and information, costs of replacement goods or services, damage to things or people, downtime or any direct, indirect, incidental, actual, punitive, exemplary, special or consequential damage of any kind whatsoever, whether contractual, extra-contractual or due to negligence, or any other liabilities deriving from the installation or use of the product, even if CAREL or its subsidiaries/affiliates are warned of the possibility of such damage.

DISPOSAL

Fig. 1

Fig. 2

PLEASE READ AND KEEP.

WITH REFERENCE TO EUROPEAN UNION DIRECTIVE 2012/19/EU ISSUED ON 4 JULY 2012 AND RELATED NATIONAL LEGISLATION, PLEASE NOTE THAT:

- Waste Electrical and Electronic Equipment (WEEE) cannot be disposed of as municipal waste but must be collected separately so as to allow subsequent recycling, treatment or disposal, as required by law;
- users are required to take Electrical and Electronic Equipment (EEE) at end-of-life, complete with all essential components, to the WEEE collection centres identified by local authorities. The directive also provides for the possibility to return the equipment to the distributor or retailer at end-of-life if purchasing equivalent new equipment, on a one-to-one basis, or one-to-zero for equipment less than 25 cm on their longest side;
- the equipment may contain hazardous substances: the improper use or incorrect disposal of such may have negative effects on human health and on the environment;
- the symbol (crossed-out wheeled bin, see Figure 1), if shown on the product or on the packaging, indicates that the equipment must be disposed of separately at end-of-life;
- if at end-of-life the EEE contains a battery (Figure 2), this must be removed following the instructions provided in the user manual before disposing of the equipment. Used batteries must be taken to appropriate waste collection centres as required by local regulations;
- in the event of illegal disposal of electrical and electronic waste, the penalties are specified by local waste disposal legislation.

Warranty on materials: 2 years (from production date, excluding consumables).

Approval: the quality and safety of CAREL products are guaranteed by the ISO 9001 certified design and production system, as well as the

CE, Intertek e WaterMark marks.

Index

1. PURPOSE OF THE MANUAL 7

2. How to read the manual 7

3. General safety information and instruction 8
3.1 Intended use 8
3.2 General safety instructions 8
3.3 Personal protective equipment 9

4. Overview 10
4.1 Description of the humidifier 10
4.2 Packaging contents 12
4.3 Dimensions and weights 12
4.4 Dimensions by model - mm (in) 13
4.5 Positioning 18
4.6 Opening the front panel 19
4.7 Material supplied 20
4.8 Technical specifications 20
4.9 Touch display remote installation 20

5. Transport and handling 21
5.1 Transport 21
5.2 Handling 21
5.3 Table of residual risks and PPE for handling operators 22

6. Installation notes 23
6.1 System layouts 23
6.2 Display "Main & Secondary" system 25
6.3 Switch for "Main & Secondary" connection 26
6.4 Type of "Main & Secondary" installation 27
6.5 Unit hardware backup 28
6.6 Supervisor protocols and configuration 28
6.7 gaSteam DigitalHUM service registration 29
6.8 Built-in web server 29
6.9 Connecting to the built-in web server 30
6.10 Wireless probe installation 30
6.11 Wireless probe installation 31

7. Installation 32
7.1 Piping connections 32

8. Steam distribution 36
8.1 Steam distribution 36

9. Electrical connections 44
9.1 Electrical connections 44
9.2 Steam production control signals 48
9.3 Control with humidity probes 49
9.4 Control with temperature probes 51
9.5 Alarm contact 53
9.6 Production request analogue output 54
9.7 Final checks 54

10. Checks before commissioning 54
10.1 Preliminary checks 54

11. Start-up and user interface 55
11.1 Commissioning 55
11.2 Activation sequence 55
11.3 Different types of gas supply 56
11.4 Shutdown 59
11.5 Graphic terminal 59
11.6 Touch display 59
11.7 Complete programming tree 62
11.8 Operation and control 65

12. User menu and unit configuration 67
12.1 Main menu 67
12.2 Menu: E. Settings 69
12.3 Menu E. Settings - a. Control 69
12.4 Menu E. Settings - b. Functions 72
12.5 Menu E. Settings - c. Configuration 75
12.6 Menu E. Settings - d. Main/Secondary 80
12.7 Menu E. Settings - e. Backup 81
12.8 Menu E. Settings - f. Manual mode 81
12.9 Menu E. Settings - g. Initialisation 81
12.10 Menu E. Settings - h. Supervisor 83
12.11 Menu E. Settings - i. Logout 85
12.12 Touch display: software update 85

13. Main/Secondary system 86
13.1 System configuration 86

14. Web server 88
14.1 Web server functions 88

15. Supervisor network 89
15.1 Table of supervisor variables 89

16. alarm table 108

17. Maintenance 112
17.1 Boiler maintenance 112
17.2 Cleaning the burner 114

18. General features and models 115
18.1 Heating-water circuit specifications 116
18.2 Technical values of the flue gas according to useful heat input 116

19. Annex 117

20. Conformity 126

1. PURPOSE OF THE MANUAL

This manual contains instructions for the installation, use and maintenance of the models of chillBooster unit referred to in paragraph 4.4. The manufacturer of the unit is:

CAREL INDUSTRIES
Via dell'Industria, 11, 35020
Brugine - Padova (Italy)
Tel. (+39) 049.9716611 - Fax (+39) 049.9716600
e-mail: carel@carel.com - www.carel.com

2. HOW TO READ THE MANUAL

The manual is divided into chapters and paragraphs. Each paragraph is a sub-level of the corresponding chapter. References to headings or paragraphs are indicated by the abbreviation "Chap." or "Par." followed by the number.
Example: "Chap. 2" or "Par. 2.1".
The figures in this manual are numbered consecutively according to the corresponding chapter, for example Figure 1.c is the third figure in chapter one. References to the figures are indicated by the abbreviation "fig." followed by the number. Example: "Fig. 1.c".
The components shown in the figures are marked with numbers. A reference to component 1 in figure 2, chapter 3 will be indicated as follows: "See 1 - Fig. 3.b" or simply "(1 - Fig. 3.b)".

IMPORTANT
The figures shown in this manual are purely indicative. The actual components may vary from those illustrated. If in doubt, contact an authorised service centre.

In addition to the instructions for installation, use and maintenance, this manual contains safety information that requires special attention. This information is denoted by the symbols described below:

DANGER
Failure to comply with this warning will lead to an imminently hazardous situation which, if not avoided, will result in death or serious injury.

WARNING
Failure to comply with this warning will lead to potentially hazardous situation which, if not avoided, could result in death or serious injury.

CAUTION
Failure to comply with this warning will lead to a potentially hazardous situation which, if not avoided, may result in minor or moderate injury.

IMPORTANT
Failure to comply with this warning will lead to a potentially hazardous situation which, if not avoided, could cause minor damage to the unit.

Notice: provides supplementary information to the above safety instructions.

3. GENERAL SAFETY INFORMATION AND INSTRUCTION

3.1 Intended use

The humidifier is designed and built exclusively to humidify rooms through distribution systems (ducts). Any other use may be a source of danger that is not contemplated in this manual and is therefore considered improper and therefore is prohibited by the manufacturer, which declines all liability in such cases.

3.2 General safety instructions

WARNING Failure to carefully heed the warnings shown in this manual could lead to fire or explosion and consequent damage to property, injury or death.

WARNING Do not store or use petrol or other flammable vapours and liquids in the vicinity of the humidifier.

DANGER If you smell gas:

1. do not attempt to switch on any appliance;
2. do not touch any electrical switches; do not use telephones in the building;
3. call the gas supplier immediately from a phone in a safe place outside of the building where the humidifier is installed. Follow the instructions given by the gas supplier;
4. if you are unable to contact the gas supplier, adopt the safety procedures in place in the country where the humidifier is installed.

The customer (manufacturer, designer or installer) accepts all liability and risk relating to the configuration of the humidifier in order to reach the expected results in relation to the specific final installation and/or equipment. The manufacturer may, based on specific agreements, act as a consultant for the installation/commissioning/use of the humidifier, however in no case does it accept liability for the correct operation of the humidifier and/or the final installation if the warnings or suggestions provided in this manual or in other product technical documents are not heeded.

In particular, as well as observing the above warnings and suggestions, the following warnings must be observed with CAUTION for correct use of the humidifier:

- The humidifier contains live electrical components. Disconnect the mains power supply before accessing inside parts or during maintenance and installation.
- The humidifier automatically and constantly fills/drains certain quantities of water. Malfunctions in the connections or in the humidifier may cause leaks.
- The humidifier contains high temperature components and delivers steam at 100°C/212°F.
- The installation of the humidifier must include an earth connection, using the yellow-green terminal provided.
- Environmental and power supply conditions must conform to the values specified on the humidifier's labels.
- All installation, use and maintenance operations must be performed by specialist and qualified personnel who are aware of the necessary precautions and are capable of performing the operations correctly and in accordance with the safety standards and legislation in force in the country where the humidifier is installed.
- Adjustment of all units (covered by UL-998) from operation on natural gas (factory setting) to LPG must only be carried out by personnel authorised button the manufacturer.
- Only water with the characteristics indicated in this manual must be used to produce steam (see par. 7.1.2).
- All operations on the product must be carried out according to the instructions provided in this manual and on the labels applied to the humidifier. All uses or modifications not authorised by the manufacturer are considered improper and therefore prohibited by the manufacturer, which declines all liability is such cases.
- Do not attempt to open the humidifier in any way other than described in the manual.
- For anything not specified in this manual, comply with the regulations in force in the country where the humidifier is installed.
- Do not install and use the humidifier near objects that may be damaged when in contact with water (or condensate). The manufacturer declines all liability for direct or indirect damage following water leaks from the humidifier.
- Do not use corrosive chemicals, solvents or aggressive detergents to clean the inside and outside parts of the humidifier, unless specifically indicated in the user manual.
- Do not drop, hit or shake the humidifier, as the inside parts and the linings may be irreparably damaged,

IMPORTANT: The manufacturer adopts a policy of continual development and consequently reserves the right to make changes and improvements to any product described in this document. The technical specifications shown in the manual may be changed without prior warning.

Notice: the liability of the manufacturer in relation to its products is specified in the general contract conditions, published on the website www.carel.com and/or by specific agreements with customers; specifically, to the extent where allowed by applicable legislation, in no case will the manufacturer, its employees or subsidiaries/affiliates be liable for any lost earnings or sales, losses of data and information, costs of replacement goods or services, damage to things or people, downtime or any direct, indirect, incidental, actual, punitive, exemplary, special or consequential damage of any kind whatsoever, whether contractual, extra-contractual or due to negligence, or any other liabilities deriving from the installation or use of the product.

3.3 Personal protective equipment

DANGER Strictly follow the instructions provided in the manual.

Personal protective equipment (PPE) means any equipment intended to be worn and kept by workers in order to protect themselves against one or more risks likely to threaten their health or safety during work, as well as any device or accessory intended for this purpose.
All PPE described in this manual are intended to protect personnel from health and safety risks.

Below is a list of personal protective equipment to be used and the procedures to be adopted to protect workers from the residual risks that exist during the various phases of the humidifier's life cycle.

GLOVES TO PROTECT AGAINST PHYSICAL ELEMENTS:
these must protect the person's hands against cuts, abrasion and heat.

NON-SLIP SAFETY FOOTWEAR: these must prevent falls on slippery surfaces and protect the person's feet from impact, crushing and puncture wounds.

SAFETY HARD HAT: this must protect the person's head against bumps or material accidentally falling from above.

SAFETY GLASSES: these must protect the person's eyes from all risks due to contact with hazardous substances or materials.

PROTECTIVE MASK: this protects the wearer's respiratory tract against all risks associated with the inhalation of dangerous substances.

PROTECTIVE CLOTHING: this guarantees the body adequate protection against thermal and chemical agents.

EARMUFFS: these must attenuate noises that would otherwise be harmful to the person's hearing.

INSTRUCTION MANUAL: this must be referred to whenever necessary, in order to avoid adopting unsafe procedures.

4. OVERVIEW

4.1 Description of the humidifier

The gaSteam (UG) humidifiers are gas-fired isothermal humidifiers for the distribution of steam, and are equipped with a graphic touch display for easy interaction with the user. Models available (identified by the part number shown on the packaging label and on the rating plate): UG045, UG090, UG150, UG180, UG300, UG450 with steam production capacity up to 450 kg/h (992 lb/h). The humidifier is available both for indoor and outdoor installation, and comes with the following certification:

- 230 Vac models: CE;
- 115 Vac models: UL.

4.1.1 Components

Figure 4.a shows the configuration of the components on the indoor and outdoor UG150 model.
For the general configuration of the other models available, see par. 4.4 - Dimensions by model.

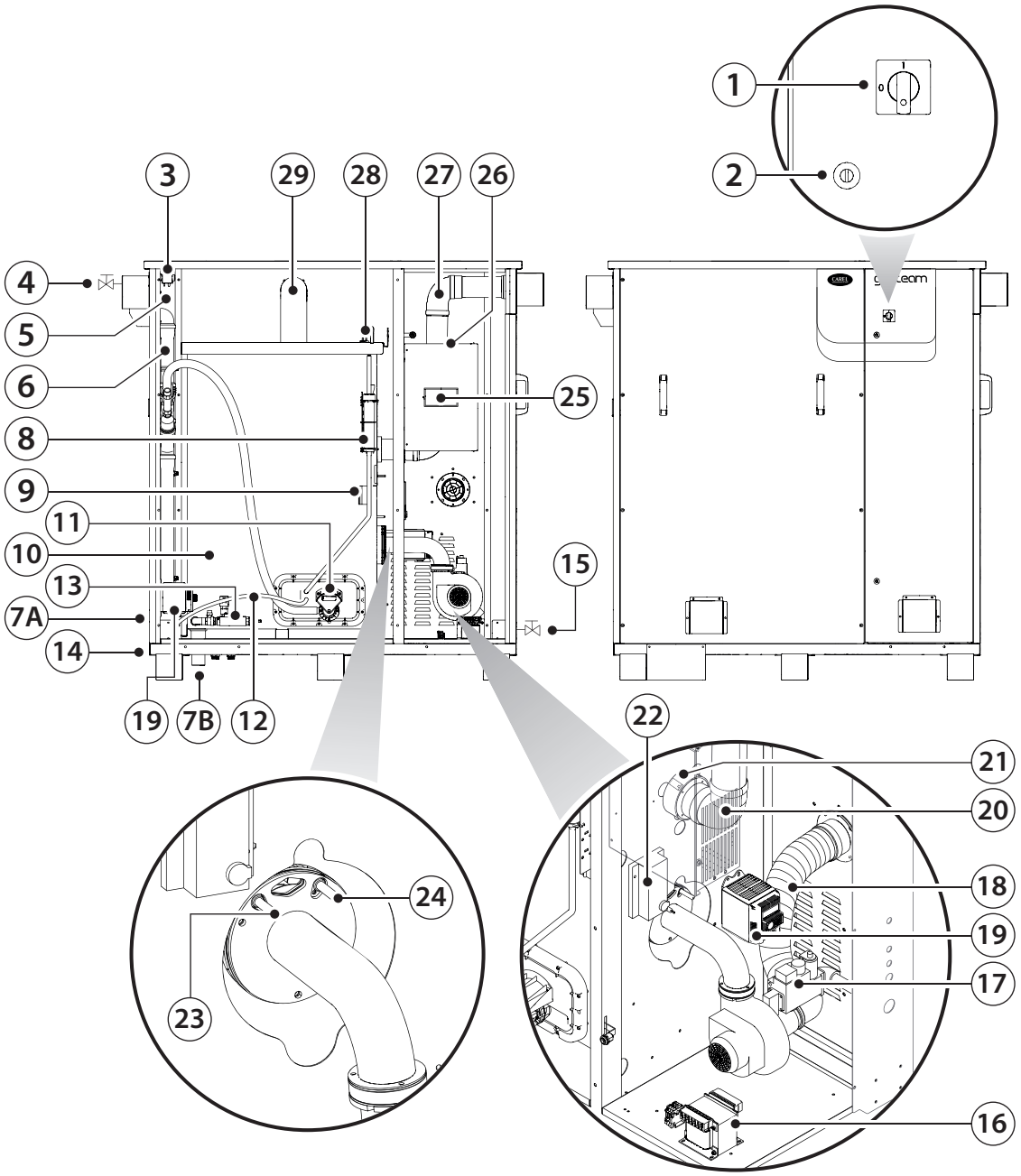

Fig. 4.a

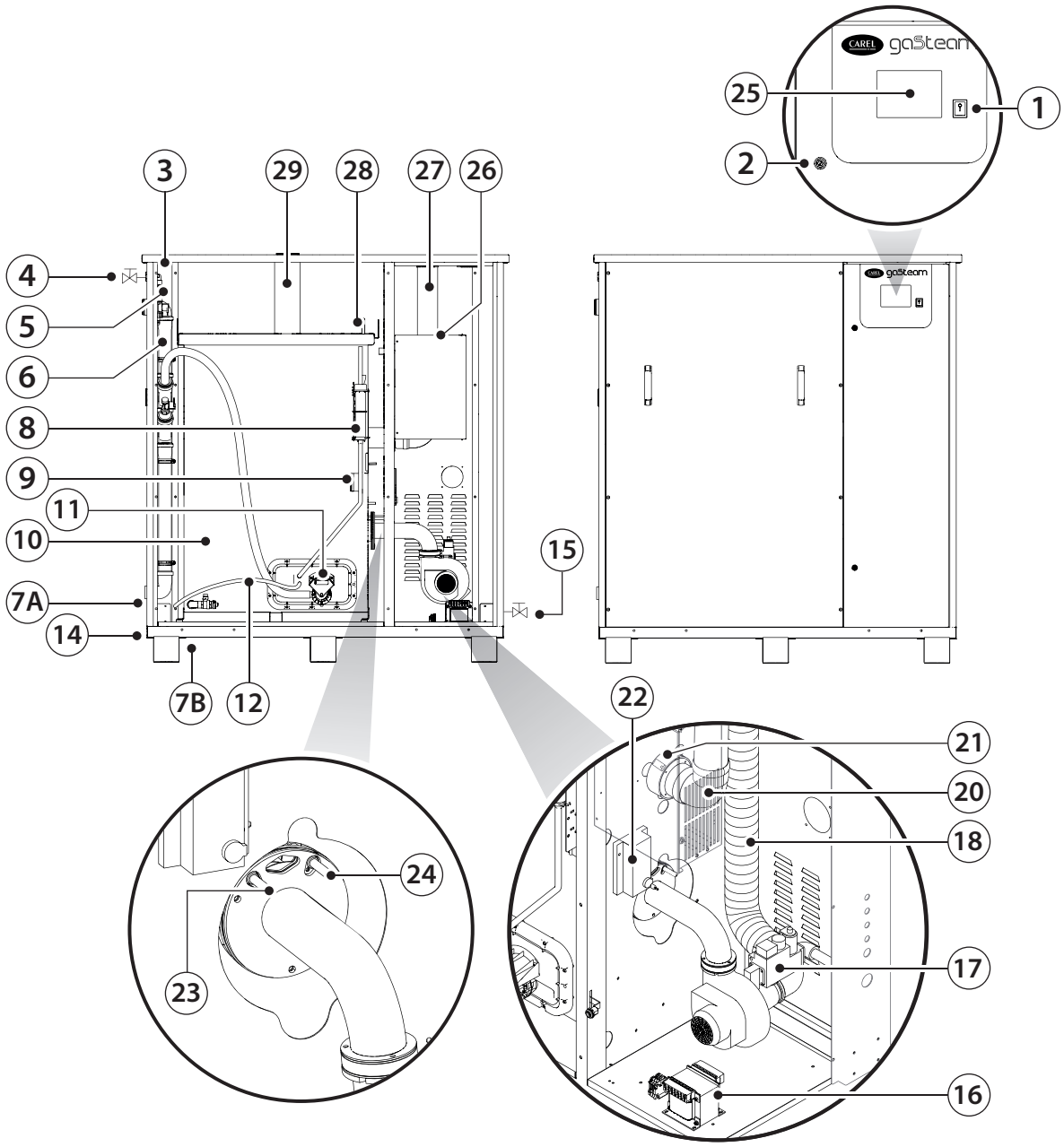

Fig. 4.b

Key:

1. disconnect switch
2. lock
3. fill solenoid valve
4. fill shut-off valve
5. conductivity meter
6. overflow/drain pipe

7.A. water drain (CE indoor - outdoor version)
7.B. water drain (UL outdoor version)

8. level sensor
9. preheating temperature sensor
10. boiler
11. drain pump
12. fill pipe
13. total boiler drain valve
14. tank drain
15. gas shut-off valve
16. 115-230V transformer (DIN version)
17. gas valve
18. combustion air intake pipe
19. heater (accessory for CE version, supplied with UL version)
20. flue gas exhaust pipe
21. safety thermostat
22. flame control board
23. ignition electrode
24. detection electrode
25. user terminal
26. electrical panel fan
27. flue gas exhaust pipe
28. foam sensor
29. steam outlet

4.2 Packaging contents

IMPORTANT

Before removing the packaging, move the humidifier to the site of installation, following the instructions shown in Chap. 5 - Transport and handling and in par. 4.5 - Positioning.

Upon opening the packaging, check the humidifier components (Fig. 4a) and the material supplied (par. 4.7).

Notice: if anything is missing when opening the package, contact the manufacturer immediately to agree on the appropriate procedures to be adopted.

4.3 Dimensions and weights

Notice: models for outdoor installation are equipped with a rain cover (P - Fig. 4.b), consequently the width and depth dimensions will vary slightly.

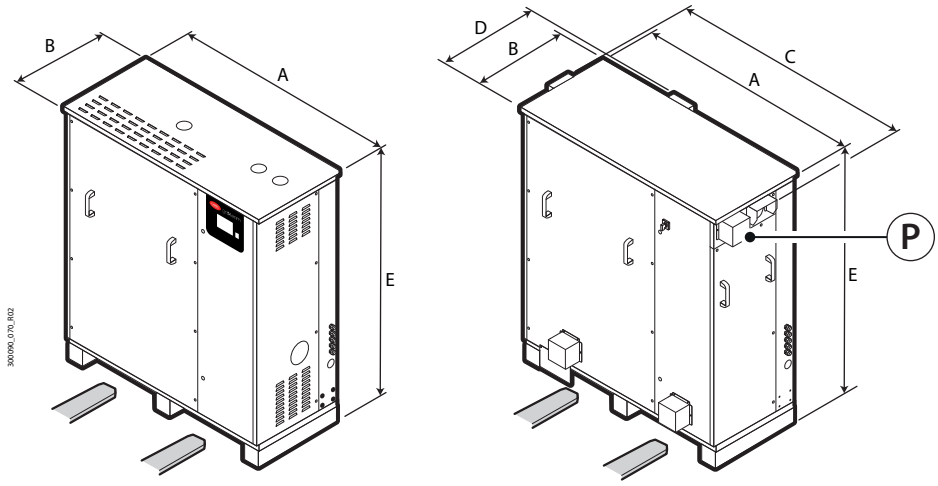

Fig. 4.c

						Weight- kg (lb)		
	A - mm (in)	C - mm (in)	B - mm (in)	D - mm (in)	E - mm (in)	Packaged	Empty	Operating
UG045	1443 (57)	-	656 (26)	-		255 (562)	240 (530)	440 (970)
UG045 outdoor	-	1560 (61)	-	800 (31)		270 (595)	255 (562)	455 (1003)
UG090	1443 (57)	-	656 (26)			255 (562)	240 (530)	440 (970)
UG090 outdoor	-	1560 (61)	-	800 (31)		270 (595)	255 (562)	455 (1003)
UG150	1443 (57)	-	656 (26)	-		255 (562)	240 (530)	440 (970)
UG150 outdoor	-	1560 (61)	-	800 (31)	1603 (63)	270 (595)	255 (562)	455 (1003)
UG180	1443 (57)	-	993 (39)	-		355 (783)	340 (750)	755 (1664)
UG180 outdoor	-	1560 (61)	-	1107 (44)		370 (816)	355 (783)	770 (1698)
UG300	1443 (57)	-	993 (39)	-		355 (783)	340 (750)	755 (1664)
UG300 outdoor	-	1560 (61)	-	1107 (44)		370 (816)	355 (783)	770 (1698)
UG450 outdoor	-	1620 (64)	-	1668 (66)		550 (1213)	530 (1168)	1150 (2535)

Tab. 4.a

4.4 Dimensions by model - mm (in)

4.4.1 Indoor models

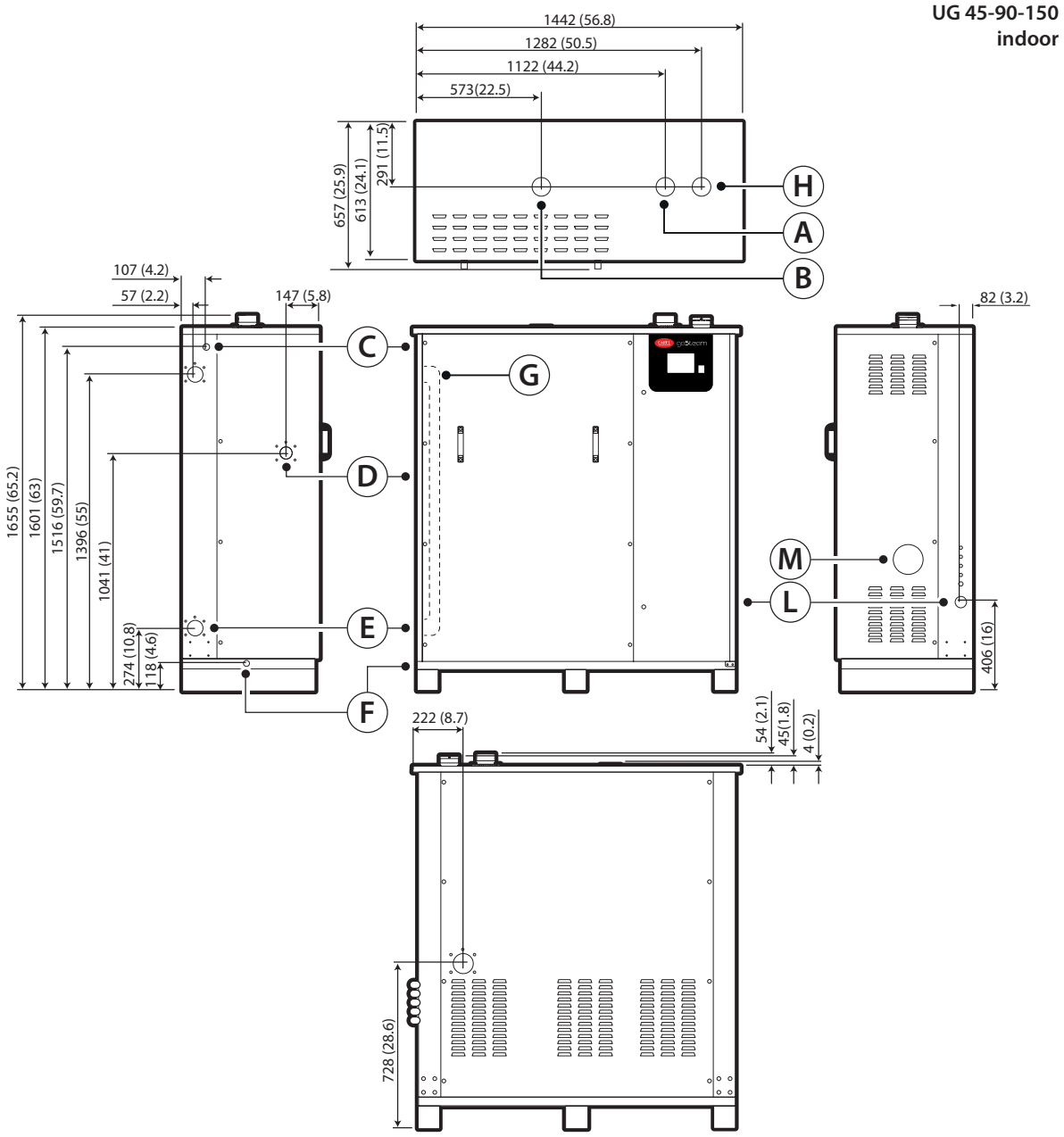

Fig. 4.d

Key

Ref.	Description
A	Flue gas outlet
B	Steam outlet
C	Water inlet
D	Drain tempering (accessory)
E	Water drain
F	Tank drain
G	Drain column
H	Combustion air intake
T	Gas inlet
M	Flame inspection opening

Tab. 4.b

Model	No. of burners	Flue gas outlets	Steam outlets	Water inlet	Gas inlet	Air intake	Tank drain	Drain tempering (accessory)
UG45	1	1 X Ø 80(3.1)	1 X Ø 80(3.1)	1 X 1/2"G - F	1 X 1"G - M	1 X Ø 80(3.1)	1 X Ø 20(0.8)	3/4" G - M
UG90	1	1 X Ø 80(3.1)	1 X Ø 80(3.1)	1 X 1/2"G - F	1 X 1"G - M	1 X Ø 80(3.1)	1 X Ø 20(0.8)	3/4" G - M
UG150	1	1 X Ø 80(3.1)	1 X Ø 80(3.1)	1 X 1/2"G - F	1 X 1"G - M	1 X Ø 80(3.1)	1 X Ø 20(0.8)	3/4" G - M

Tab. 4.c

UG 180-300
indoor

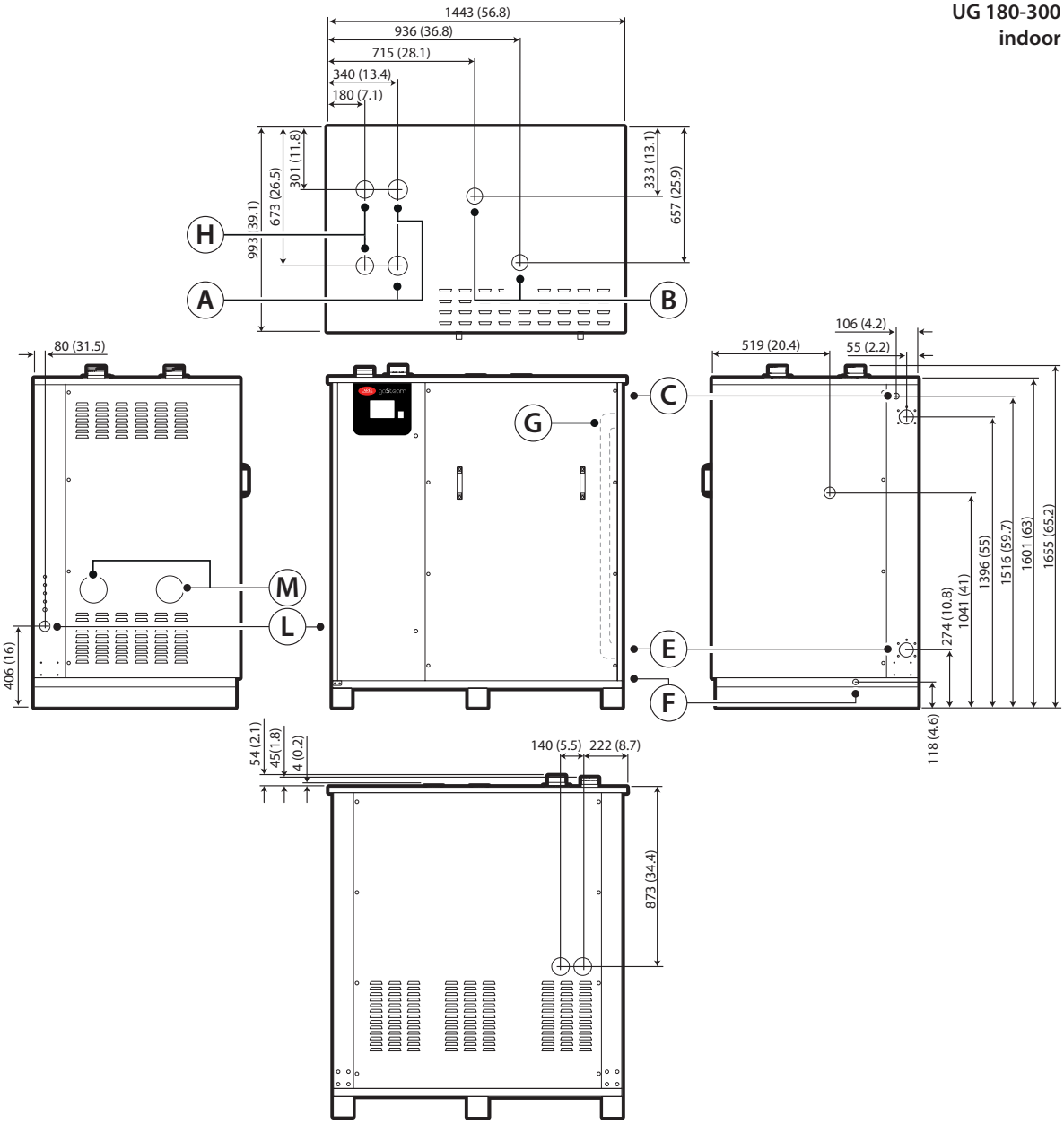

Fig. 4.e

Key

Ref.	Description
A	Flue gas outlet
B	Steam outlet
C	Water inlet
D	Drain tempering (accessory)
E	Water drain

Ref.	Description
F	Tank drain
G	Drain column
H	Combustion air intake
T	Gas inlet
M	Flame inspection opening

Tab. 4.d

Model	No. of burners	Flue gas outlets	Steam outlets	Water inlet	Gas inlet	Air intake	Tank drain	Drain tempering (accessory)
UG180	2	2 X Ø 80(3.1)	2 X Ø 80(3.1)	1 X 1/2"G - F	1 X 1"1/4 G - M	2 X Ø 80(3.1)	1 X Ø 20(0.8)	3/4" G - M
UG300	2	2 X Ø 80(3.1)	2 X Ø 80(3.1)	1 X 1/2"G - F	1 X 1"1/4 G -M	2 X Ø 80(3.1)	1 X Ø 20(0.8)	3/4" G - M

Tab. 4.e

4.4.2 Outdoor models

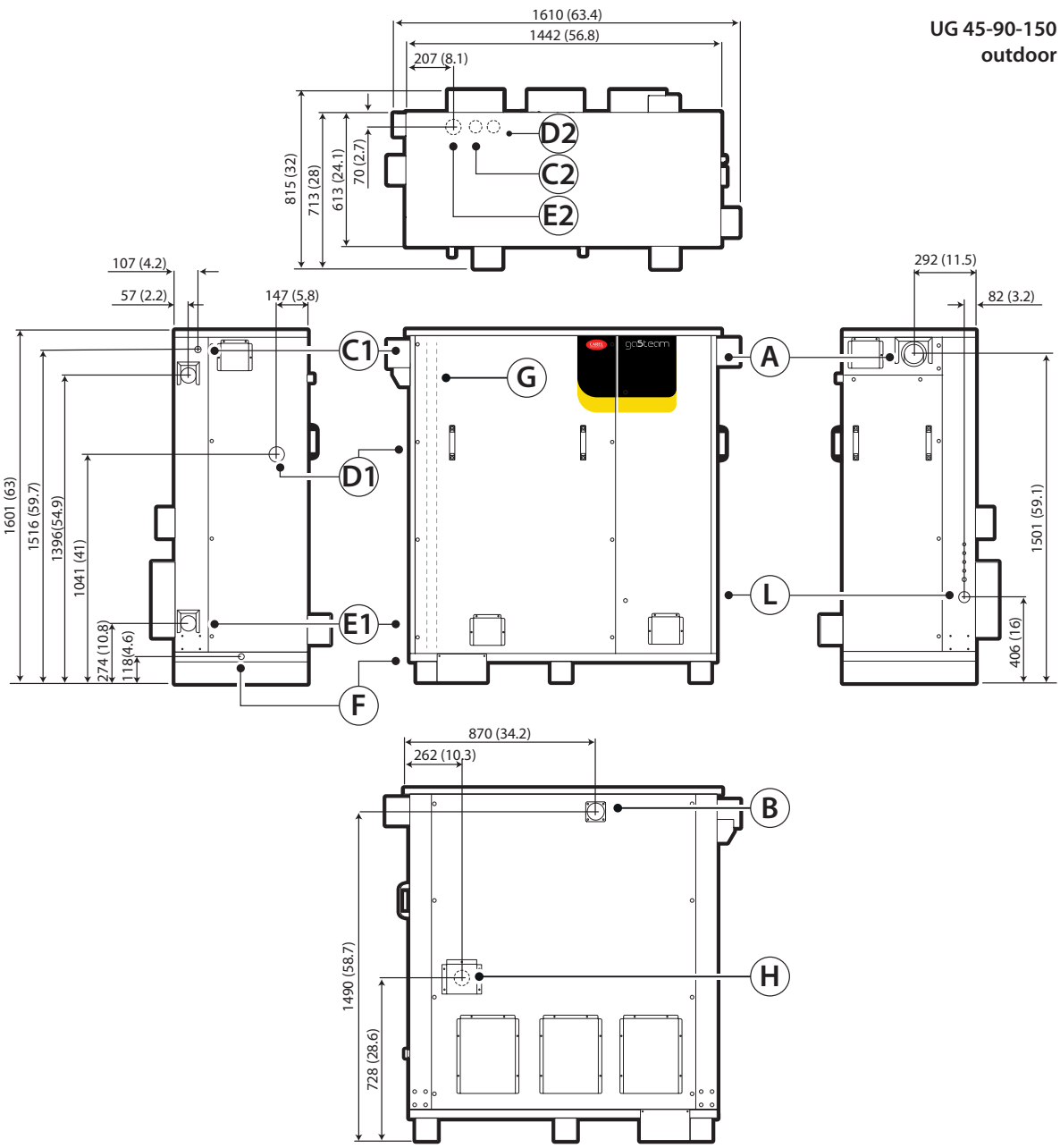

Fig. 4.f

Key

Ref.	Description
A	Flue gas outlet
B	Steam outlet
C1	Water inlet (CE version)
C2	Water inlet (UL version)
D1	Drain tempering (accessory) (CE version)
D2	Drain tempering (UL version)

Ref.	Description
E1	Water drain (CE version)
E2	Water drain (UL version)
F	Tank drain
G	Drain column
H	Combustion air intake
T	Gas inlet

Tab. 4.f

Model	No. of burners	Flue gas outlets	Steam outlets	Water inlet	Gas inlet	Air intake	Tank drain	Drain tempering (accessory)
UG45	1	1 X Ø 80(3.1)	1 X Ø 80(3.1)	1 X 1/2"G - F	1 X 1"G - M	1 X Ø 80(3.1)	1 X Ø 20(0.8)	3/4" G - M
UG90	1	1 X Ø 80(3.1)	1 X Ø 80(3.1)	1 X 1/2"G - F	1 X 1"G - M	1 X Ø 80(3.1)	1 X Ø 20(0.8)	3/4" G - M
UG150	1	1 X Ø 80(3.1)	1 X Ø 80(3.1)	1 X 1/2"G - F	1 X 1"G - M	1 X Ø 80(3.1)	1 X Ø 20(0.8)	3/4" G - M

Tab. 4.g

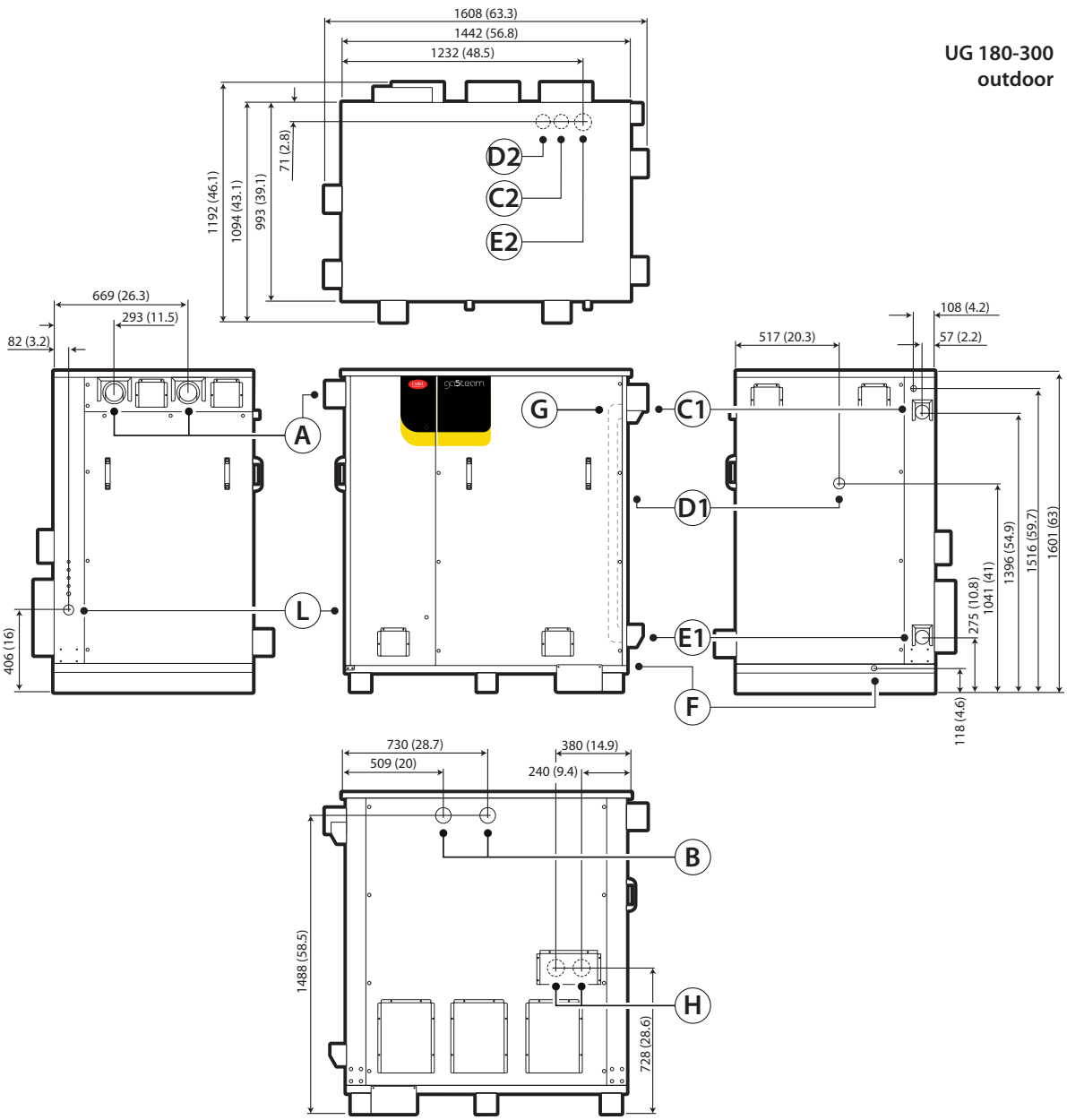

Fig. 4.g

Key

Ref.	Description
A	Flue gas outlet
B	Steam outlet
C1	Water inlet (CE version)
C2	Water inlet (UL version)
D1	Drain tempering (accessory) (CE version)
D2	Drain tempering (UL version)

Ref.	Description
E1	Water drain (CE version)
E2	Water drain (UL version)
F	Tank drain
G	Drain column
H	Combustion air intake
T	Gas inlet

Tab. 4.h

Model	No. of burners	Flue gas outlets	Steam outlets	Water inlet	Gas inlet	Air intake	Tank drain	Drain tempering (accessory)
UG180	2	2 X Ø 80(3.1)	2 X Ø 80(3.1)	1 X 1/2" G - F	1 X 1"1/4 G - M	2 X Ø 80(3.1)	1 X Ø 20(0.8)	3/4" G - M
UG300	2	2 X Ø 80(3.1)	2 X Ø 80(3.1)	1 X 1/2" G - F	1 X 1"1/4 G - M	2 X Ø 80(3.1)	1 X Ø 20(0.8)	3/4" G - M

Tab. 4.i

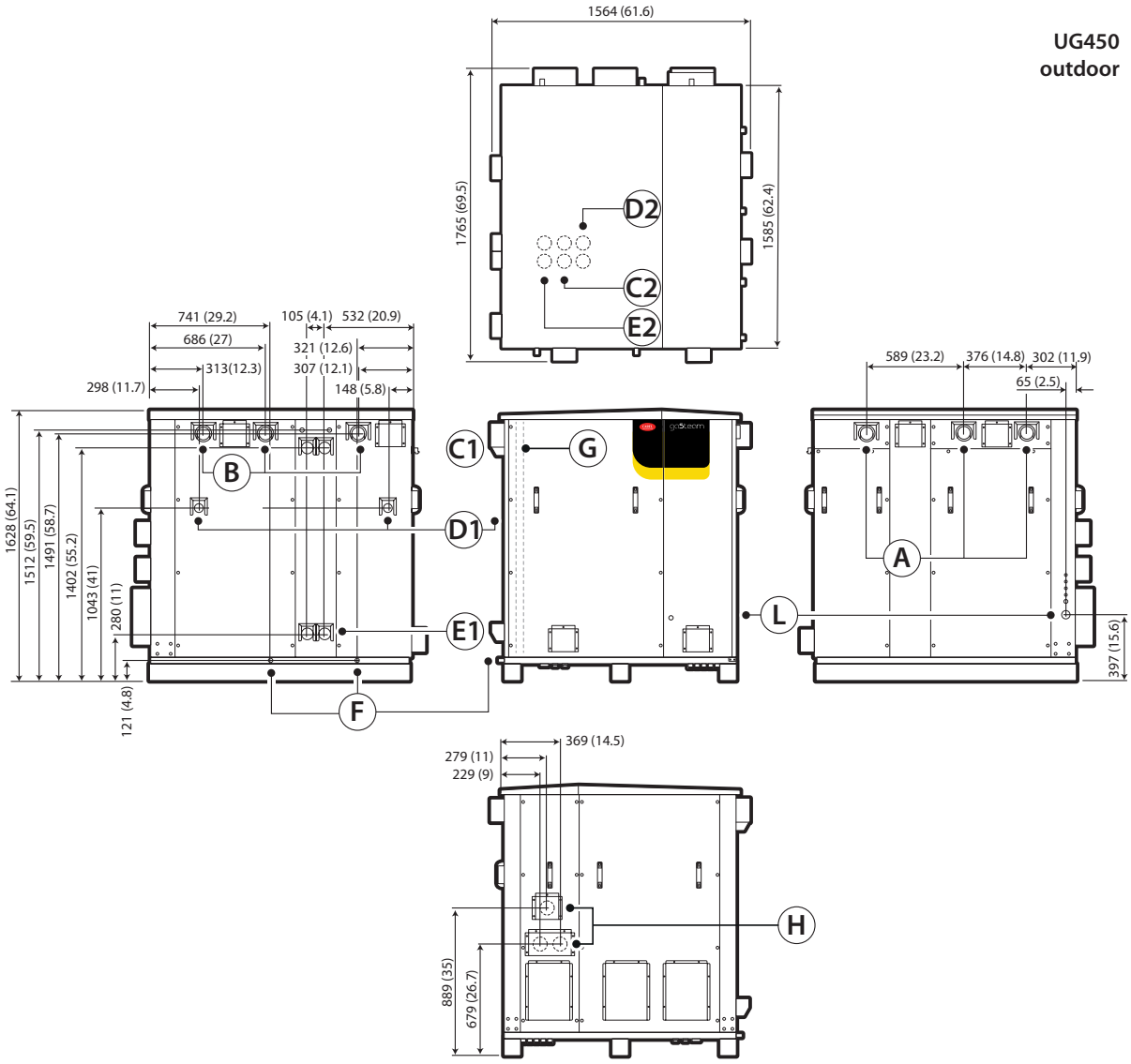

Fig. 4.h

Key

Ref.	Description
A	Flue gas outlet
B	Steam outlet
C1	Water inlet (CE version)
C2	Water inlet (UL version)
D1	Drain tempering (accessory) (CE version)
D2	Drain tempering (UL version)

Ref.	Description
E1	Water drain (CE version)
E2	Water drain (UL version)
F	Tank drain
G	Drain column
H	Combustion air intake
T	Gas inlet

Tab. 4.j

Model	No. of burners	Flue gas outlets	Steam outlets	Water inlet	Gas inlet	Air intake	Tank drain	Drain tempering (accessory)
UG450	3	3 X Ø 80(3.1)	3 X Ø 80(3.1)	2 X 1/2" G - F	1 X 1"1/2 G - M	3 X Ø 80(3.1)	2 X Ø 20(0.8)	3/4" G - M

Tab. 4.k

4.5 Positioning

The humidifier must be positioned so as to allow the following operations:
- opening the front panel;
- accessibility to the electrical panel;
- accessibility to the internal parts for checks and maintenance;
- connection to the feedwater line;
- connection to the water drain line;
- connection to the air intake line;
- connection to the flue gas exhaust line;
- power and control electrical connections;

The place where the humidifier is installed must also guarantee:
- the most suitable position for steam distribution, that is, the position that minimises the length of the steam hose.
- a base that can support the weight of the humidifier in operation (see Table 4.a).

CAUTION: the metal casing of the humidifier heats up during operation, and the top part may reach temperatures > 60°C (140°F); therefore make sure that this does not cause any problems.

IMPORTANT: make sure that the combustion air intake grille is not blocked or covered.

Notice: make sure the humidifier is level, and that the minimum clearances are respected, as shown in the figure below, to allow room for maintenance operations.

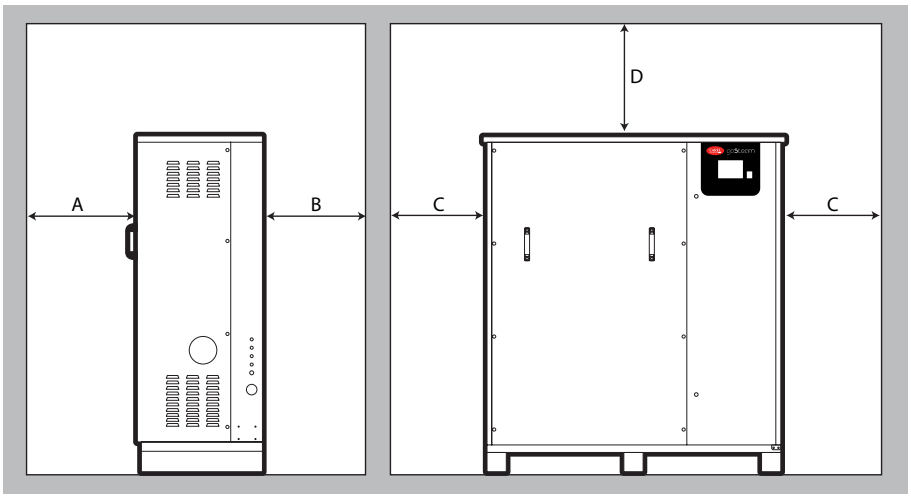

Fig. 4.i

Models with rear air intake

	A - mm (in)	B - mm (in)	C - mm (in)	D - mm (in)
outdoor	900 (35)	100 (4)	600 (24)	1000 (39)

Models with air intake from top

	A - mm (in)	B - mm (in)	C - mm (in)	D - mm (in)
indoor	900 (35)	50 (2)	600 (24)	1000 (39)

Tab. 4.l

WARNING: before making the connections, disconnect the power supply by turning the main switch (1 - Fig. 4.b) to OFF.

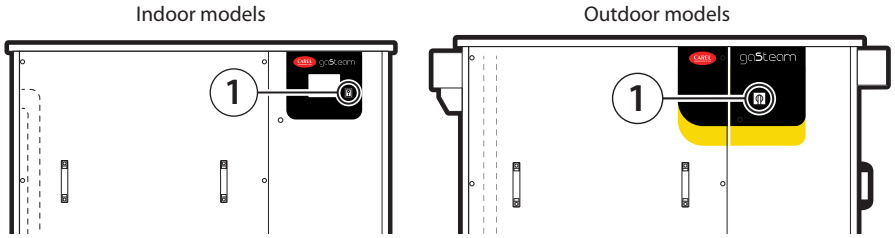

Fig. 4.j

4.6 Opening the front panel

Unscrew the screws using a suitable tool (A - Fig. 4.j), grasp the handles and slide the panel slightly downwards to remove it.

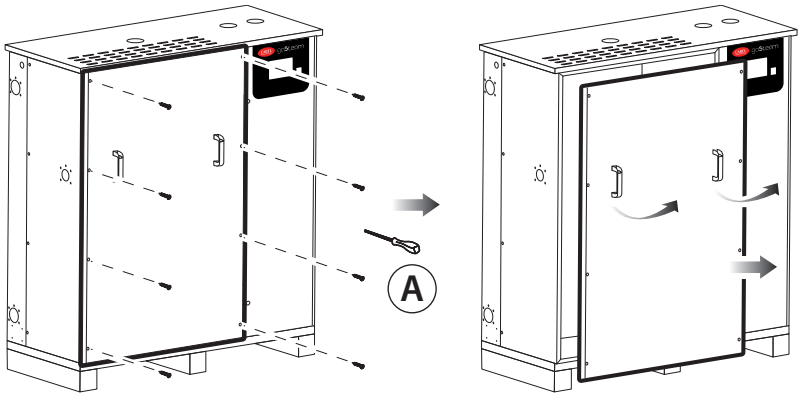

Fig. 4.k

Notice: in the outdoor models, the front panel handles are supplied disassembled. These should be assembled before opening the humidifier front panel.

4.6.1 Accessing the electrical panel

Notice: the user terminal (T - Fig. 4.k) is located:

- on the indoor model: mounted on the door and accessible from the outside;
- on the outdoor model: inside the unit, in the electrical panel (Q - Fig. 4.k).

Indoor model

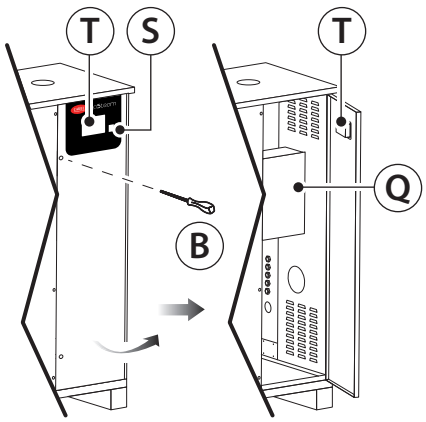

Outdoor model

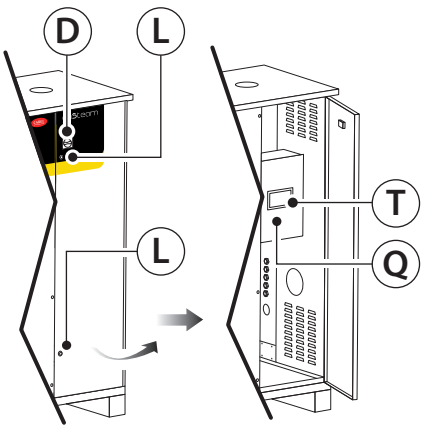

Fig. 4.l

Procedure:

30. Electrically disconnect the unit.
31. Loosen the screw (B - Fig. 4.k) and open the door to access the electrical panel (Q - Fig. 4.k).

Procedure:

1. Turn the disconnect switch (D - Fig. 4.k) OFF to electrically disconnect the unit;
2. Turn the key in both locks (L - Fig. 4.k) and open the door to access the electrical panel (Q - - Fig. 4.k).

4.7 Material supplied

Once the packaging has been opened and the front panel removed, make sure that all of the components listed in the table and shown in Fig. 4.a are present.

	UG45-90-150		UG180-300		UG450
	indoor	outdoor	indoor	outdoor	outdoor
Water circuit					
Water hose with compression fitting	1	1	1	1	2
Threaded hose coupling	1	1	1	1	2
Gas shut-off valve	1	1	1	1	1
Water shut-off valve with gasket	1	1	1	1	2
Cable gland PG13.5	1	1	1	1	1
Cable gland PG9	4	4	4	4	4
Weatherproof cover	-	8	-	10	14
Flue gas exhaust:					
Probe section	1	1	2	2	3
Reducer (UL version)	1	2	2	4	6
Elbow	-	1	-	2	3
Condensate collection section	1	-	2	-	-
Flue gas inspection section	1	-	2	-	-
Flue gas outlet terminal	-	1	-	2	3
Flue gas inspection flange with screws	-	1	-	2	3

Tab. 4.m

4.8 Technical specifications

4.8.1 Rating plate

The humidifier can be identified by the rating plate placed on the partition in the electrical cabinet. There is also a label showing the types of gas allowed for each country and the corresponding supply pressures (classification according to EN437).

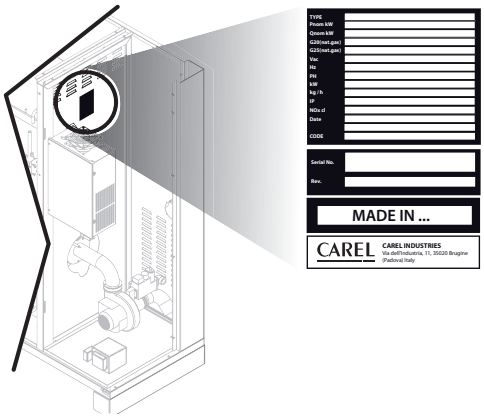

Fig. 4.m

Notice: tampering, removal or absence of the rating plate or anything else that does not allow certain identification of the humidifier will make any installation or maintenance operations difficult and void the warranty.

4.9 Touch display remote installation

To install the 4.3" touch screen in a remote position, use kit P/N HCTXRC0000. The kit comprises a touch display, a 24 Vdc power supply, a telephone cable and a telephone splitter for simultaneous connection of the two displays (one in the remote position and the other installed on the humidifier).

5. TRANSPORT AND HANDLING

DANGER: always place the humidifier on surfaces that are suitable to support its weight.

WARNING: transport operations must be carried out by trained personnel using certified equipment in good condition. Transport equipment and tools must be suitable for the weight and characteristics of the humidifier.

WARNING: make sure that there are no unauthorised persons or things that could obstruct the lifting and transport operations in the area where these are performed.

WARNING: any other method of handling or transport not described in this manual is considered unsuitable, dangerous and therefore not approved by the manufacturer.

5.1 Transport

The humidifier is shipped already assembled, packed and secured to pallets suitable for the weight of the humidifier by special straps. The places where the forklift forks can be inserted are marked by special tags. To guarantee correct handling, loading and anchoring of the packages, the manufacturer checks all of the phases in the preparation of the packages and all of the materials needed for transport before the humidifier is loaded on the vehicle, and provides a delivery note (DDT) where the carrier can express any reservations about the stability or suitability of the load for the vehicle in question. Nonetheless, the recipient must scrupulously check the packages before they are unloaded from the delivery vehicle. Notify the carrier immediately, in writing, of any damage that may be due to improper or negligent transport. Move the humidifier to the site of installation before removing it from the packaging, grasping the neck from underneath using suitable lifting equipment. Open the cardboard box, remove the protective material and remove the unit, keeping it vertical at all times.

Notice: the packaging material must not be dispersed in the environment; consequently, the different types of material must be separated and disposed of by local waste disposal services, in accordance with the regulations in force in the country where the humidifier is installed.

5.2 Handling

Handling operations must be carried out by qualified personnel, with an assistant required for signalling.
The lifting and transport equipment must be of suitable capacity and chosen based on the dimensions, weight and shape of the humidifier (Tab. 4.a). The capacity of the lifting equipment and accessories must be greater (with a margin of safety) than the weight of the loads being moved. Lifting movements must be continuous, without jerking or sudden movements. During handling, nobody is allowed in the manoeuvring area; the entire surrounding area is considered a danger zone. The handling operator is responsible for verifying the stability of the humidifier before lifting and handling it.

5.3 Table of residual risks and PPE for handling operators

PPE required:

- Protective gloves
- Non-slip safety footwear
- Safety hard hat
- Instruction manual

Residual risk	Procedure to be adopted
Risk of cutting or abrasion due to sharp edges or surfaces.	Wear gloves to protect against physical agents and a hard hat before entering the work area.
Risk of slipping, tripping or falling due to slippery surfaces in the installation area.	Wear non-slip shoes.
Risk of tripping and falling due to insufficient lighting.	The humidifier must be installed in an environment with medium intensity lighting, in compliance with the regulations in force in the country where the humidifier is installed.
Crushing risk due to suspended loads.	Display the pictogram prohibiting parking and transit in areas where there are suspended loads.
Crushing risk due to loss of stability during handling.	Strictly follow the instructions described in this manual and on the labels affixed to the humidifier.

Tab. 5.a

DANGER: the mass and dimensions of the humidifier do not allow for manual handling under any conditions.

WARNING: the safety manager is responsible for assessing the need to equip handling operators with additional personal protective equipment in accordance with the environmental conditions where the operations are performed.

6. INSTALLATION NOTES

6.1 System layouts

Below are some typical installations of gaSteam units for AHU/duct applications.

gaSteam layout with ultimateSAM steam distributor

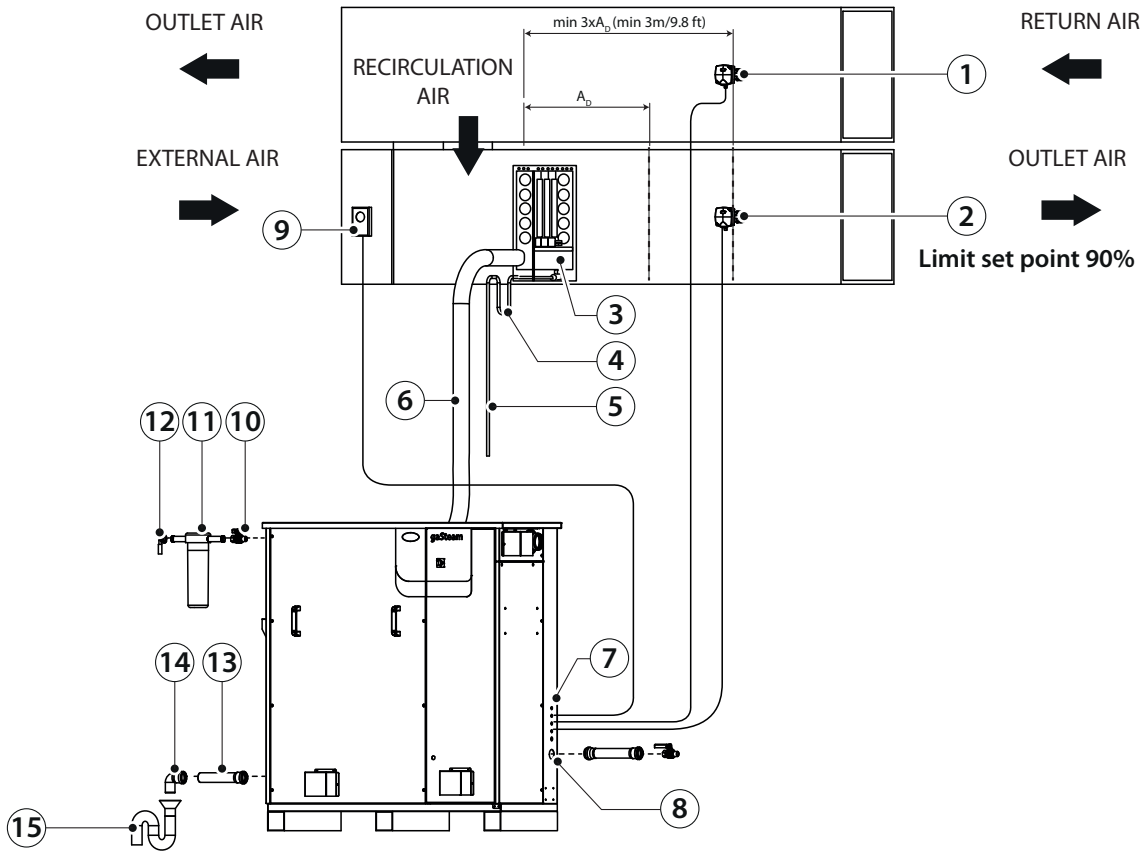

Fig. 6.a

Key:

Ref.	Description	Ref.	Description
1	Air intake probe	9	Air flow switch
2	Limit probe	10	Water inlet shut-off valve
3	Steam distributor	11	Filter (not supplied as standard)
4	Condensate drain trap	12	Water fill pipe
5	Condensate drain pipe	13	Water drain pipe
6	Steam hose	14	Elbow
7	Signal / power input	15	Drain trap
8	Gas inlet line		

Tab. 6.a

gaSteam layout with DP series steam distributor

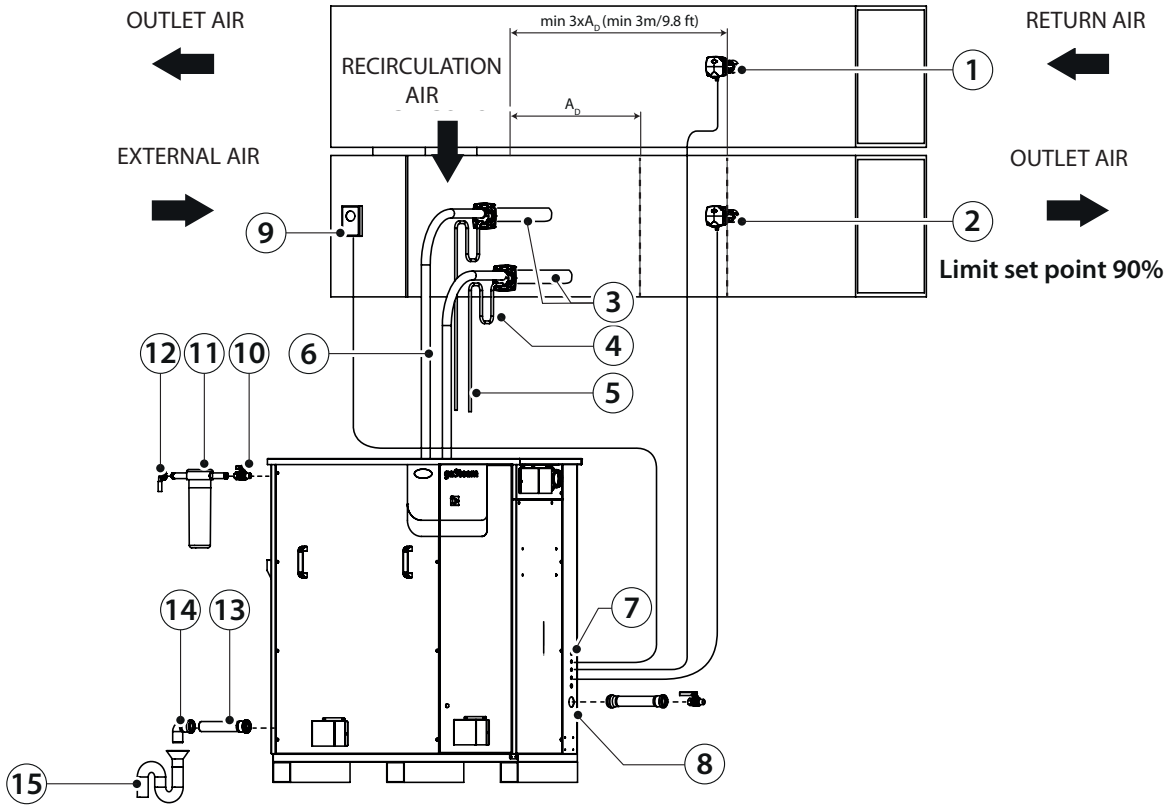

Fig. 6.b

Key:

Ref.	Description	Ref.	Description
1	Air intake probe	9	Air flow switch
2	Limit probe	10	Water inlet shut-off valve
3	Steam distributor	11	Filter (not supplied as standard)
4	Condensate drain trap	12	Water fill pipe
5	Condensate drain pipe	13	Water drain pipe
6	Steam hose	14	Elbow
7	Signal / power input	15	Drain trap
8	Gas inlet line		

Tab. 6.b

Notice:

- A_D: Steam absorption distance (also see paragraph 8.1 Steam distribution).
  - For a length equal to at least A_D, there must be no obstacles of any type downstream of the steam distributor. This ensures best absorption of the steam into the air, thus avoiding the formation of condensate or wetting of parts and components of the AHU/duct.
  - The limit probe must be placed three times further than the estimated absorption distance (A_D).
  - If the estimated absorption distance is not known, the limit probe must be placed at least 3 m from the distributor.

The suggested set point for the limit probe is 90% rH.

gaSteam layout for outdoor installation with connections at the bottom (US market only)

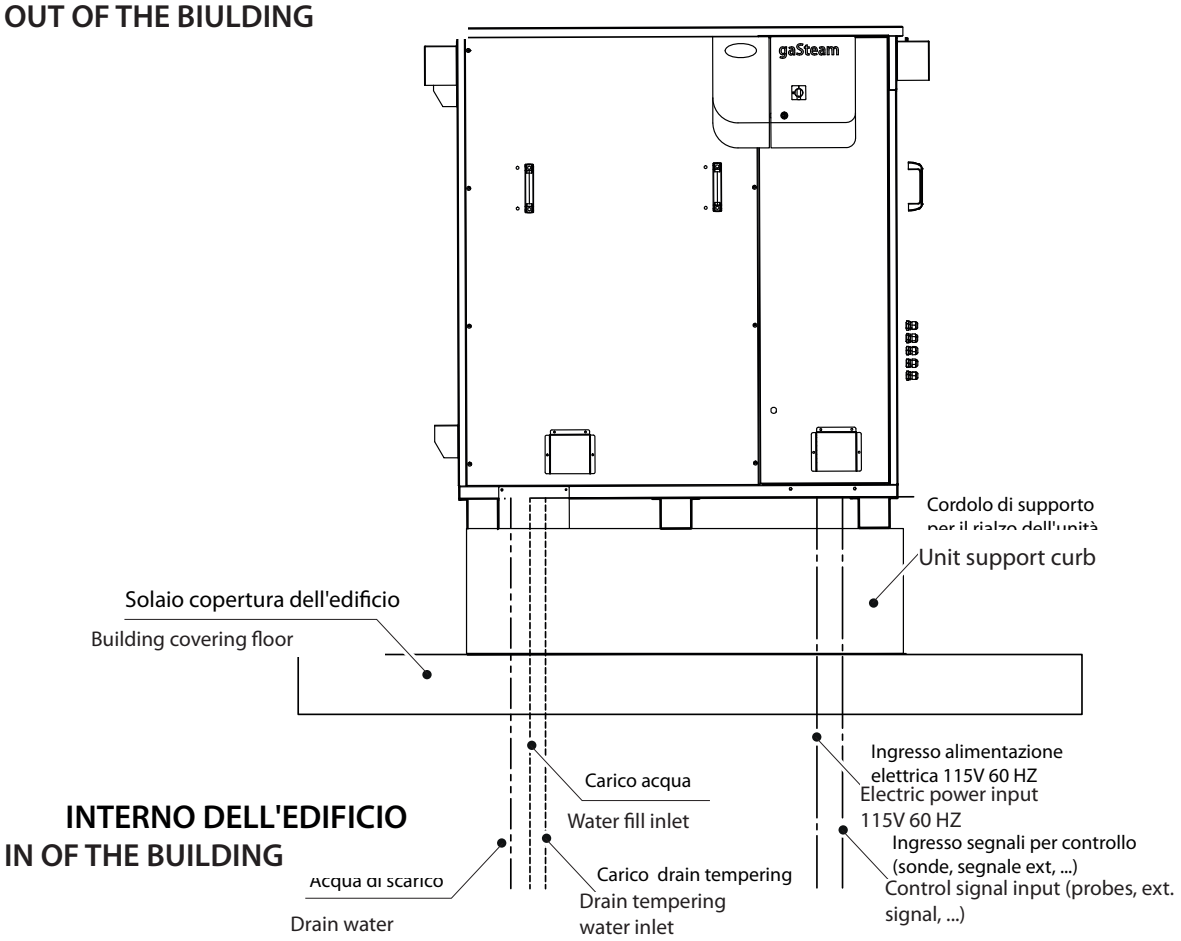

Fig. 6.c

Notice:

- The water inlet pipes must be insulated to prevent condensation and freezing.

Please, refer to the addendum manual (cod. +03U0124EN) for more USA market installation details

6.2 Display "Main & Secondary" system

To obtain steam production higher than that provided by one single unit, several humidifiers can be connected together in a Main/Secondary system. A maximum of 19 Secondary units can be connected to each Main, meaning a total of 20 humidifiers. The Main and Secondary units are connected using a local Ethernet network, and in the case of just two units (one Main and Secondary) involves a direct connection between the two controllers via Ethernet RJ45 Category 5 cable.

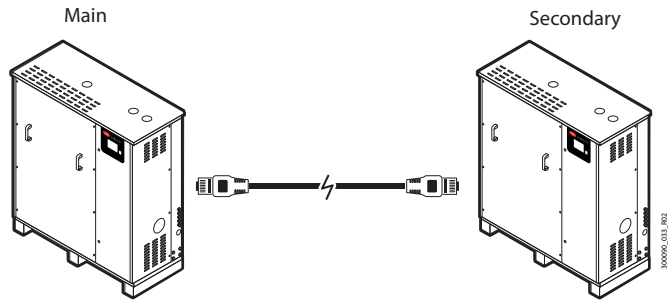

Fig. 6.d

If the Main/Secondary system comprises three or more units, a network switch is required.

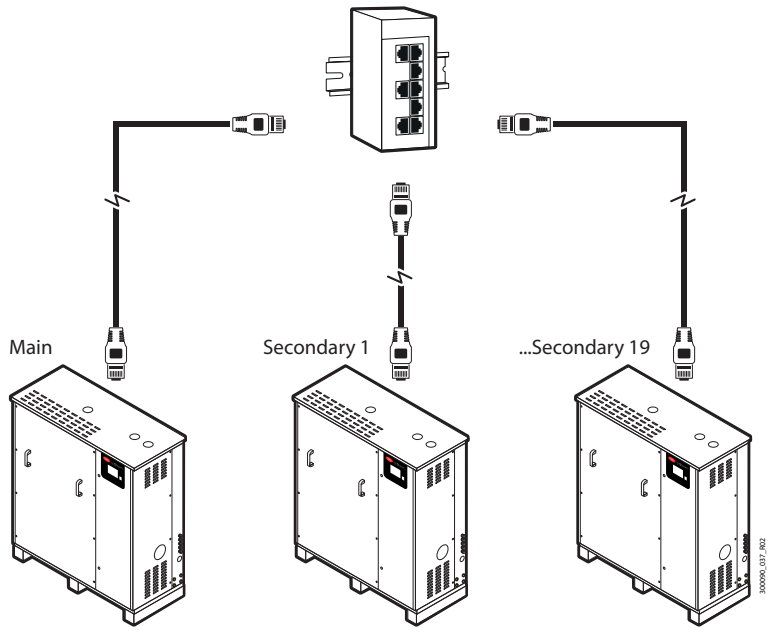

Fig. 6.e

The Ethernet port is available on the humidifier's c.pHC controller:

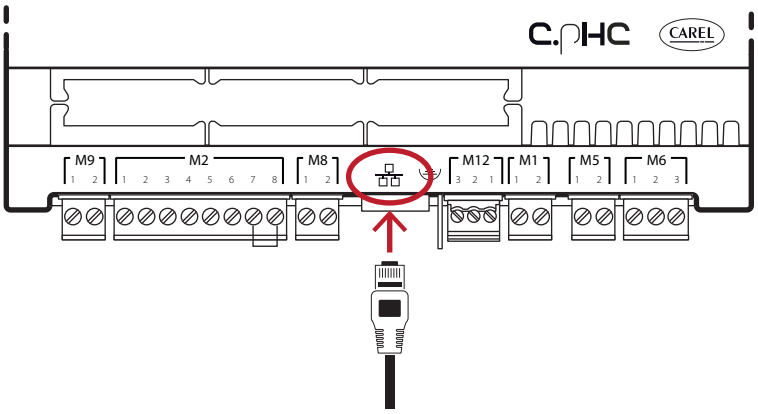

Fig. 6.f

Notice: use a CAT-5 STP Ethernet cable with a maximum length of 100 m. To connect the shield, use the earth connector provided on the controller.

6.3 Switch for "Main & Secondary" connection

The Main/Secondary connection of more than two units requires the use of an industrial grade switch. The switch (P/N: can connect a maximum of eight units (8 Ethernet ports). If necessary, use several switches with a cascaded arrangement.

Technical specifications:

Number of ports	8
Installation	DIN rail
Operating temperature	-10 to 60°C (14 to 140°F)
Power supply	12/24/ 48 Vdc
	18-30 Vac (47-63 Hz)
Current @ 24 Vdc	0.13A
Protection	IP30

Tab. 6.c

6.4 Type of "Main & Secondary" installation

The Main/Secondary system features one Main humidifier, which manages operation of the Secondary units. The external signal or probe connections, depending on the set control type, are made to just one of the humidifiers in the system. The unit that the signal is connected to will automatically be identified as the Main. Consequently, the Main does not need to be especially configured.

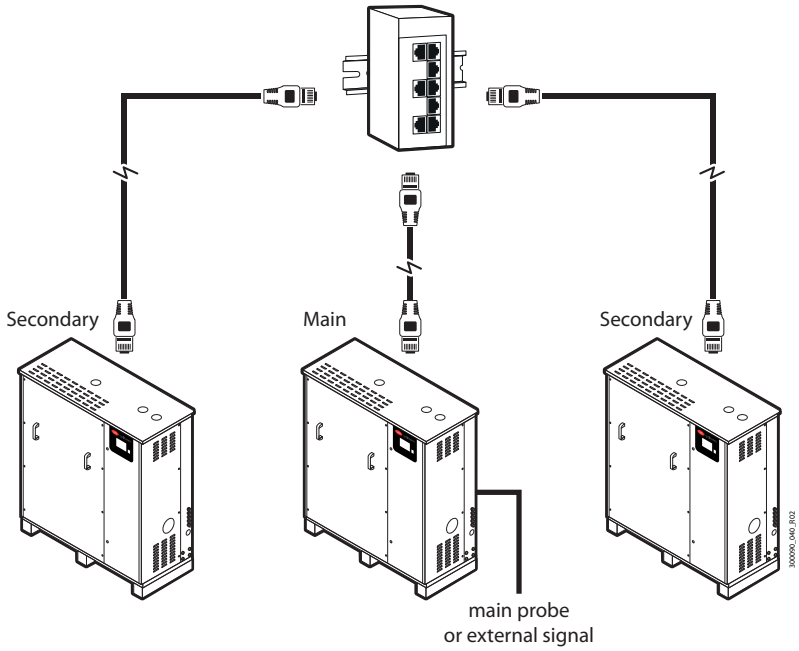

Fig. 6.g

As long as the Main unit is powered, the system will operate even if the Main unit itself has a malfunction (e.g. alarms, production stopped, ...), as the controller on this unit will send all the necessary data to the Secondary units. Obviously, if system redundancy is not provided for, the amount of steam produced will be lower than actual requirements. If the Main unit is completely switched off, the Main/Secondary system cannot read the signals/control probes. Therefore, it is recommended to connect at least two (or all) of the humidifiers in the system to the external signal or to fit them with distinct probes.

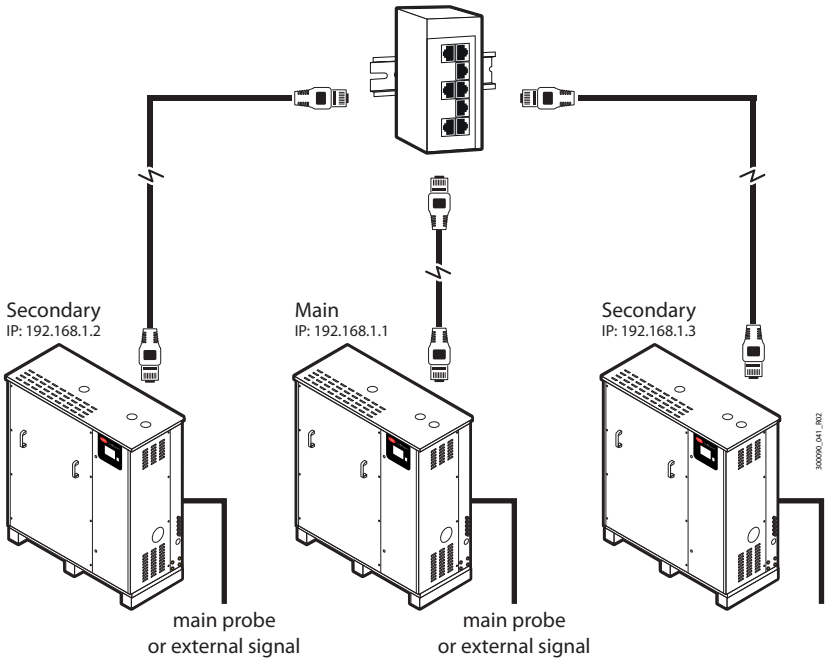

Fig. 6.h

6.5 Unit hardware backup

For applications that require continuous humidity control, a second backup unit may be required, which is automatically activated in the event of a malfunction on the first. The gaSteam controller features a dedicated digital input and output for the backup connection, so as to guarantee, via the normally-open contact, activation of the second unit.

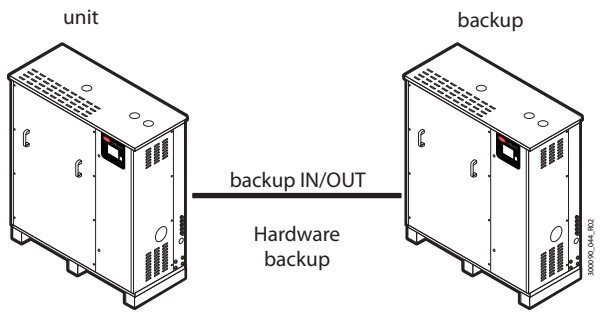

Fig. 6.i

Connection between two units for the hardware backup function:

Terminal	Function
9U	Backup and rotation contact common
10U	Backup and rotation contact (NO)
2U	GND
4U	Digital input for backup/rotation function

Tab. 6.d

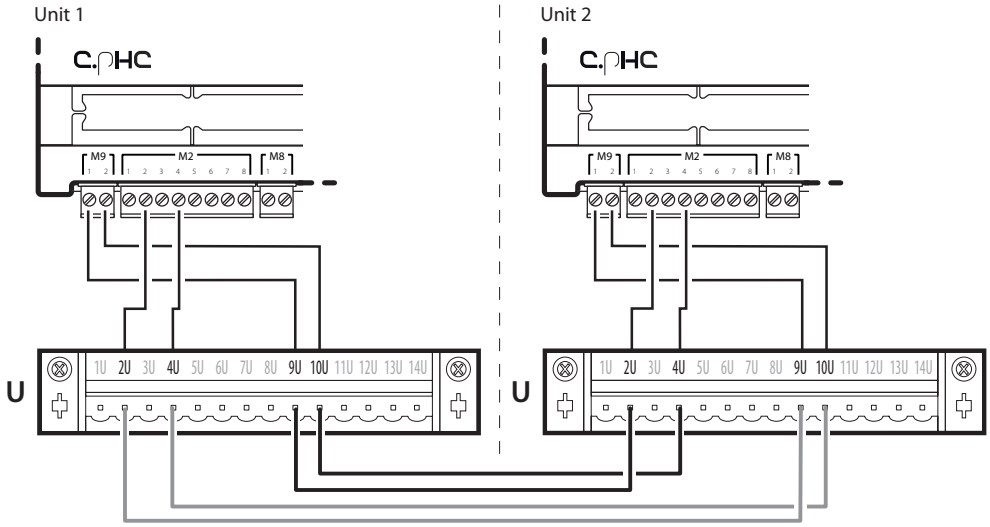

Fig. 6.j

The hardware backup function must be activated on the menu in screen Ee01. Screen Ee02 is used to set the unit with higher priority in the event of simultaneous activation. To ensure service continuity, the external signal or probes must be connected to both units; in this way, both the main unit and the backup unit will be completely independent. If using autonomous control with probes, it is recommended to use dedicated probes for each unit (main probe and limit probe), in other words, do not share the probes between the units. This will guarantee service even in the event of probe malfunctions.

6.6 Supervisor protocols and configuration

The humidifier can be connected to a supervisor via serial (BMS) or Ethernet network. The Carel, ModBus and BACnet protocols are supported as standard by the units.

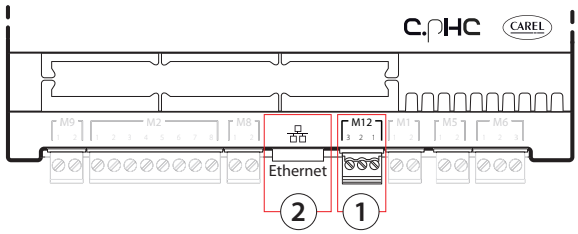

Key:

Port	Terminal on c.pHC controller	Protocol
BMS (1)	M12.1, M12.2, M12.3	Carel, ModBus, BACnet
Ethernet (2)		ModBus, BACnet

Tab. 6.e

Fig. 6.k

To configure supervision on the BMS port (1), go to "SETTINGS – SUPERVISION", specifically screens Eh01, Eh02 and Eh03. If connecting the supervisor to the Ethernet port (2), set the network parameters (DHCP, IP address, subnet mask, gateway, DNS) on screen Eh04. For other supervisor protocols, select Carel protocol and use the Carel external gateway (supernode for humidification: SNU0000EM0), combined with the desired supervisor card (depending on the protocol).

Notice:

- use CAT-5 STP Ethernet cable, max length = 100 m. To connect the shield, use the earth connector provided on the controller.
- For BMS and Fieldbus, use shielded cables with the shield connected to earth.

6.7 gaSteam DigitalHUM service registration

The system can be connected to the DigitalHUM service, the cloud portal for remote monitoring of Carel humidifiers. DigitalHUM allows remote control of the units, with complete diagnostics for analysis of system operating conditions and efficiency.

Fig. 6.l

To activate the service, in addition to requesting activation of the DigitalHUM cloud portal via a token, a CloudGate needs to be installed in order to communicate with the humidifier via the Modbus RS485 protocol and in turn remotely control the humidifier from DigitalHUM (https://digitalhum.teraportal.com/).

The connection diagram between the humidifier and CloudGate is shown below.

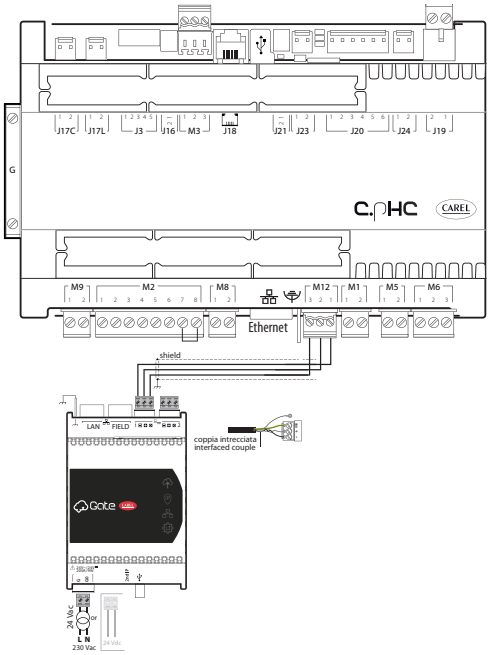

Fig. 6.m

Depending on the CloudGate model used, either connect to the local network (LAN) or fit the mobile connection antenna, to allow the unit to communicate with the DigitalHUM portal. For further details, see the CloudGate technical leaflet (+0500150IE).
For further information, contact your local Carel subsidiary (https://www.carel.com/branches).

6.8 Built-in web server

The built-in web server is used to configure and monitor the main unit parameters directly from a PC. In fact, using the Ethernet port on the humidifier controller, the unit can be accessed via a local network by simply entering its IP address in the browser.

Fig. 6.n

To log in and access the various menu items, use the installer or service password (see the chapter "Start-up and user interface").

6.9 Connecting to the built-in web server

For the physical connection to the controller from a PC, must use the RJ45 Ethernet port on the c.pHC and an Ethernet category 5 cable.

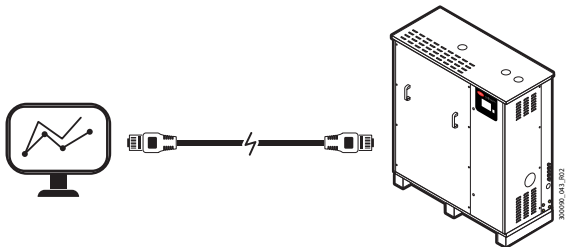

Fig. 6.o

Location of the Ethernet port on the c.pHC controller.

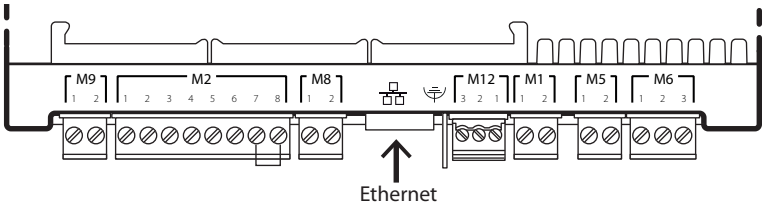

Fig. 6.p

The PC and the humidifier controller (or all controllers, for Main/Secondary systems) must be part of the same subnetwork.
The default network configurations for the c.pHC are:

- Unit's IP address: 192.168.0.1;
- subnet mask: 255.255.255.0;
- gateway: 192.168.0.1.

For example, the PC's network settings can be changed as follows:

- Unit's IP address: 192.168.0.2;
- subnet mask: 255.255.255.0;
- gateway: 192.168.0.1.

To do this, access the "Network and sharing center" on the PC and go to "Local network connection". Then modify the addresses, as shown above, for Internet protocol version 4. Each c.pHC controller can obviously also be added to the Ethernet local network, allowing the web server to be accessed from any point in the network and for each humidifier.

IMPORTANT: the controller is not accessible directly on the internet as a firewall guarantees remote access only via a secure connection (Carel tERA cloud or encrypted VPN connection).

6.10 Wireless probe installation

For installations where standard wired probes can not be used, (for example, modifications to existing systems), wireless probes can be used. These are connected via a device called an access point (P/N: WS01AB2M20), for up to 4 wireless probes. The wireless probes available are for room installation (WS01G01M00) or industrial applications (WS01F01M00), both of which measure humidity and temperature. Installation diagram (with four wireless room probes):

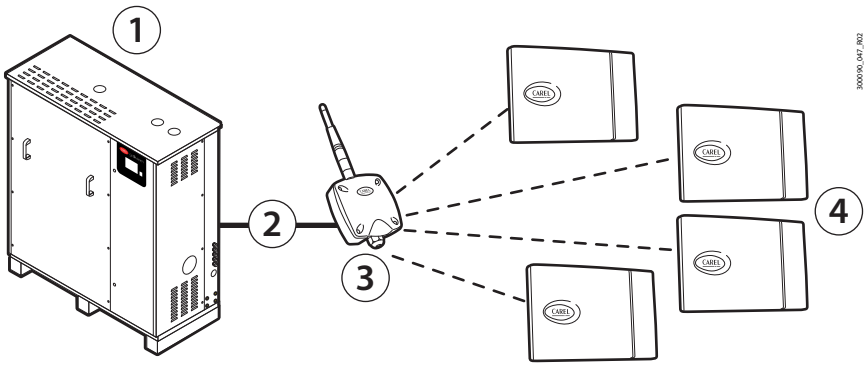

Fig. 6.q

Key:

1.	gaSteam humidifier;
2.	humidifier/access point connection;
3.	Access point;
4.	Wireless probes for measuring temperature and humidity;

Tab. 6.f

gaSteam/access point connection:
To connect the humidifier to the access point, use the Fieldbus connection on terminal M3 (M3.1: Tx/Rx-, M3.2: Tx/Rx+, M3.3: GND):

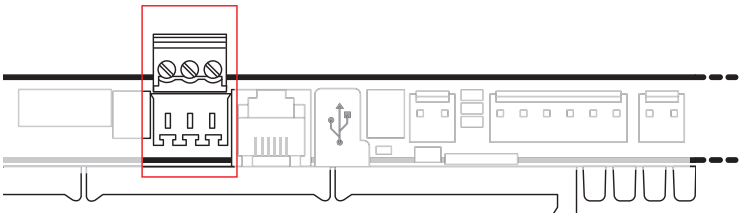

Fig. 6.r

Notice: the devices have a range of around a hundred metres in a free space, i.e. without any obstacles. In a closed space, the range varies considerably depending on the type of environment and the surrounding objects (shelves, metal partition walls etc.).

If installing multiple wireless probes, the controller will calculate the weighted average between the various probe readings, depending on the settings made by the user and the defined probe groups. Also see the paragraph "Wireless probes". The controller also displays (locally only) the battery and signal level for each probe (screens D05 to D08). The table below shows the part numbers and descriptions of the devices that can be used:

Code		Model	Specifications	Power supply
WS01F01M00		SI sensor	Temperature/humidity for industrial use	Battery
WS01G01M00		SA sensor	Room temperature/humidity	Battery
WS01AB2M20		Access Point	ZigBee™ – RS485 Modbus® wireless gateway	12-24 Vac/dc ±10% 100 mA; 50/60 Hz; Use a Class II safety transformer with a minimum power rating of 2 VA. A 12 Vac transformer is recommended

Tab. 6.g

6.11 Wireless probe installation

The main steps for installing the wireless devices are:
- power up the access point (12/24 Vac/dc ±10%m, 100 mA) and complete the initialisation procedure, creating the network and selecting the channel;
- after having opened the domain on the access point, complete the binding procedure so as to uniquely identify each probe.

The address to be used by the access point is set using the dipswitches on the device, and is the following:

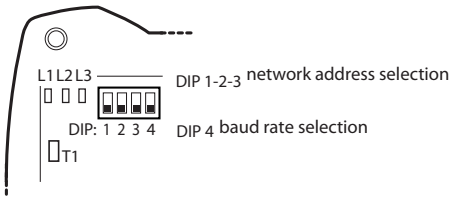

Fig. 6.s

Dipswitch				Access Point Access Point	Serial port baud rate (bit/s) N82
1	2	3	4	2	19200
OFF	ON	OFF	ON		

Tab. 6.h

This assigns the address 2 to the access point, with a baud rate (bit/sec) of 19200 (N82). The addresses of the four serial probes, on the other hand, must be set as shown in the table below:

	Address	Dipswitch							
		1	2	3	4	5	6	7	8
Probe 1	16	0	0	0	0	1	0	0	0
Probe 2	17	1	0	0	0	1	0	0	0
Probe 3	18	0	1	0	0	1	0	0	0
Probe 4	19	1	1	0	0	1	0	0	0

Tab. 6.i

Remember to verify the quality of the wireless signal between the access point and each wireless probe. For a complete description of the installation procedure, see the manual on the corresponding probes and access point. To configure the probes, see screens: Ec03, Ec04, Ec05, Ec06 and Ec07 described under "Wireless probes". In particular, screen Ec03 is used to enable the wireless probes connected to the access point, knowing that addresses 16, 17, 18 and 19 are Probe 1, Probe 2, Probe 3 and Probe 4 respectively.

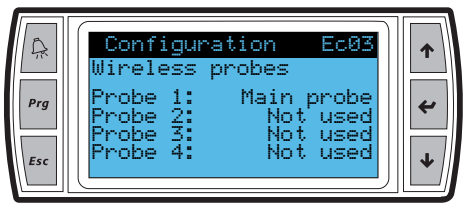

Fig. 6.t

7. INSTALLATION

7.1 Piping connections

The humidifier requires a connection to the gas and water supply and water drain pipes. The feedwater supply can be connected using a hose with a minimum inside diameter (recommended) of 6 mm. Install a shut-off valve to allow the appliance to be disconnected during maintenance. We recommend the use of hoses (P/N FWH3415004), installing a mechanical filter to trap any solid impurities.

To make the connection:

- drain water: use non-conductive plastic tubing resistant up to 100°C (212°F), with an inside diameter of 50 mm (1.96") (3A, 5A - Fig. 7.a);
- gas supply: use a flexible metal pipe (with vibration isolating joint) connected to a manual shut-off valve.

IMPORTANT: the drain pipe must not be obstructed, must not have back pressure and must be fitted with a drain trap immediately downstream of the connection to the humidifier.

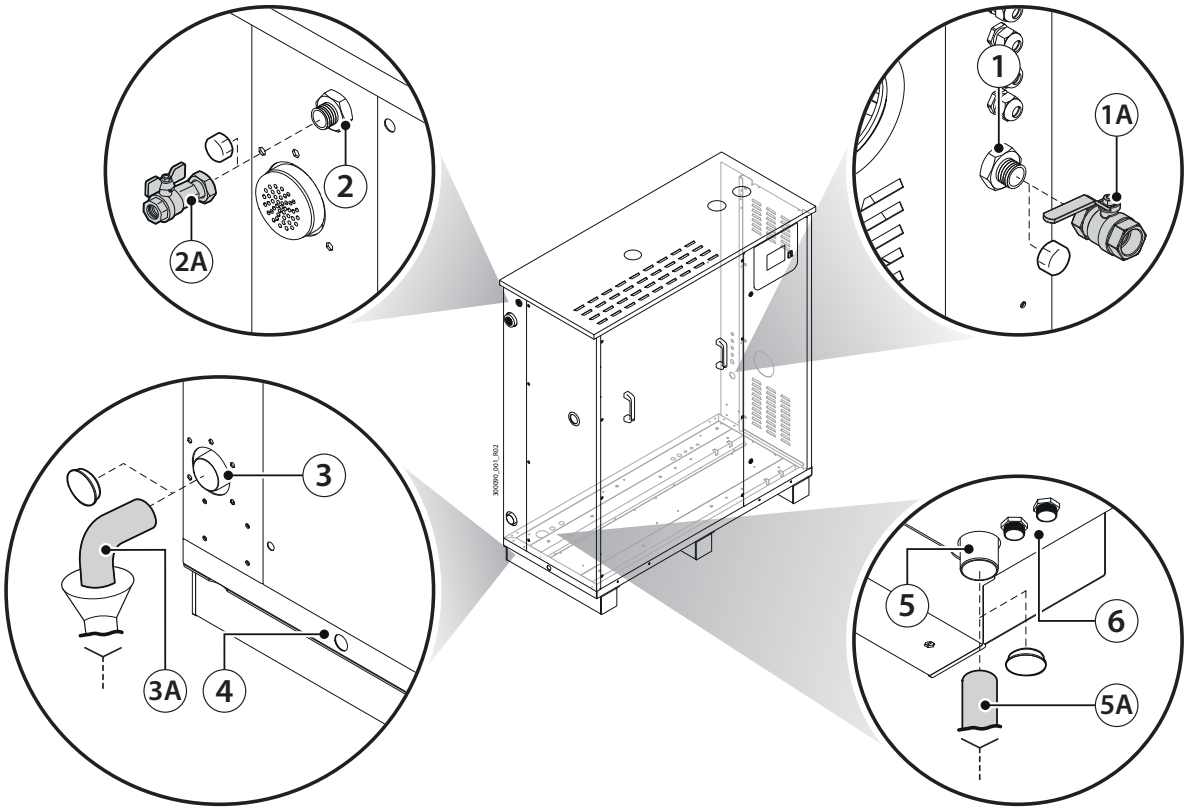

Fig. 7.a

Ref.	Description
1	gas supply connection
1A	gas shut-off valve
2	water inlet connection
2A	water inlet shut-off valve (recommended)
3	water drain connection (CE indoor - outdoor version)
3A	water drain pipe (CE indoor - outdoor version)
4	tank drain connection
5	water drain connection (UL outdoor version)
5A	water drain pipe (UL outdoor version)
6	water fill and drain tempering connections (UL outdoor version)

Tab. 7.a

7.1.1 Water circuit connection diagram

IMPORTANT: the drain pipe must not be obstructed, must not have back pressure and must be fitted with a drain trap immediately downstream of the connection to the humidifier.

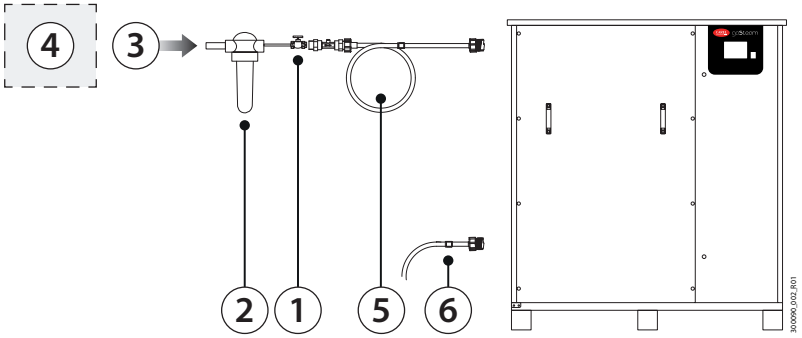

Fig. 7.b

Ref.	Description
1	shut-off valve
2	filter (not supplied by the manufacturer)
3	feedwater
4	optional reverse osmosis water treatment system (not supplied by the manufacturer)
5	hose FWH3415004
6	hose (drain tempering option, not supplied by the manufacturer)

Tab. 7.b

Notice: for the Australian market and to meet Watermark requirements, a Watermark approved double check valve must be installed on the humidifier feedwater line when connected to the potable water supply network. If, on the other hand, the humidifier is supplied with water from a reverse osmosis system connected to the potable water supply network, the double check valve must be installed on the inlet to the reverse osmosis system.

7.1.2 Feedwater

The feedwater supply to the humidifier must not be corrosive, must not emit bad odours, and must not have an excessive lime content to avoid scale build-up. The water supply must be potable or demineralised water, and must comply with the limits shown in the following table. To reduce the frequency of maintenance operations, the use of demineralised water is recommended. In this case a reverse osmosis demineralisation system is recommended, which can be supplied by the manufacturer on request.

IMPORTANT: water treatment with polyphosphates or water softeners is allowed, guaranteeing at least 60% of the initial hardness value and no less than 5°f. Softened water reduces maintenance however may increase the concentration of dissolved salts in the water inside the boiler, with the consequence of foam formation.

Notice: if supplied with water coming from an external reverse osmosis system, an instant flow-rate of 20 l/min (5.28 Gal/min) must be guaranteed. For UG450, there are two inlets, therefore the instant flow-rate must be 2 x 20 l/min (2 x 5.28 US gal/min).

		Min	Max
Specific conductivity at 20°C	σ20 - µS/cm	0	1500
Total dissolved solids	TDS – mg/l	(1)	(1)
Dry residue at 180°C	R180 – mg/l	(1)	(1)
Hydrogen ion activity	pH	6	8.5
Total hardness	TH– mg/l CaCO3	0 (2)	400
Temporary hardness	mg/l CaCO3	0 (3)	300
Chlorides	ppm Cl	-	50 (4)
Iron + Manganese	mg/l Fe+Mn	-	0.2
Silica	mg/l SIO2	-	20
Residual chlorine	mg/l Cl-	-	0.2
Calcium sulphate	mg/l CaSO4	-	100
Metallic impurities	mg/l	0	0
Solvents, thinners, detergents, lubricants	mg/l	0	0

Tab. 7.c

(1) Values dependent on the specific conductivity; in general: TDS ≈0.93 * σR, 20 °C; R180 ≈0.65 * σR , 20 °C;
(2) Not lower than 200% the chloride content in mg/l Cl-;
(3) Not lower than 300% the chloride content in mg/l Cl-;
(4) It may be necessary to adjust the drain rate to avoid a concentration in the boiling water higher than 300 mg/l Cl-.

7.1.3 Drain water characteristics

The drain water:
- contains the same substances that are dissolved in the supply water, yet in greater quantities;
- can reach a temperature of 100°C (212°F);
- for drain tempering versions, water temperature will be 60°C (140°F), with a ma inlet temperature of 25°C (77°F).

IMPORTANT: completely demineralised water is aggressive. For connection to a feedwater system with completely demineralised water, only use components made from chemically-resistant plastic (e.g. polypropylene) or stainless steel.

7.1.4 Air intake and flue connections

Notice: the abbreviations that identify the various configurations for installation refer to the EN 1749:2020 standard (classification of gas appliances according to the method of supplying combustion air and of evacuation of the combustion products).

The gaSteam humidifier is an approved type C appliance (sealed appliance) in accordance with EN 1749:2020.
Regarding the installation type, in accordance with EN 1749:2020, the following configurations are possible: B23, C13, C33, C43, C53.

Notice: for non-CE versions, the legal requirements in force in the country where the humidifier is installed apply.

Notice: the flue gas outlets on the indoor and outdoor models are identical.

IMPORTANT: the air intake pipes and flues must be installed and positioned according to the corresponding legislation and standards in force, as well as to the any national or local provisions, and therefore the validity of the diagrams below should always be verified.

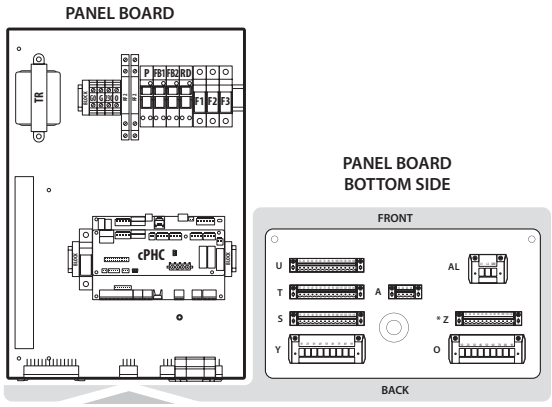

Fig. 7.c

The air intake/flue gas exhaust pipes must be connected as shown in the following figure:

Ref.	Description
A	Flue gas outlet
B	Combustion air intake

Tab. 7.d

For further requirements, use flue gas accessories available on the market. The maximum lengths specified in the following installation diagrams have been verified using the specified pipes.
For the position of the combustion air intake and flue gas outlet, see "Dimensions by model".

The indoor version is factory-set as follows:
- flue gas outlet from the top of the humidifier;
- air intake from the top of the humidifier.

Notice: fit the condensate collection section and connect a pipe to the hole on the side to drain the condensate and prevent it from causing the burner to malfunction.

Both the flue gas outlet and the combustion air intake can be moved using the accessories available, based on installation requirements, with reference to the pressure drop values shown in Tables 7.e, 7.f and 7.g.

Notice: the data shown in Tables 7.e, 7.f and 7.g refer to aluminium or stainless steel ducts.

	Unit	DP		
UG45 max. 70 Pa (0.0101 PSI)		d=80mm (3")	d=100mm (4")	d=120mm (4"3/4)
linear section of pipe	Pa/m (PSI/ft)	2.5 (1.1 x 10^{-4})	1 (1.5 x 10^{-4})	0.4 (1.8 x 10^{-5})
90° bend r/d=0.5	Pa (PSI)	6.4 (9.3 x 10^{-4})	2.6 (3.8 x 10^{-4})	1.2 (1.7 x 10^{-4})
90° bend r/d=1	Pa (PSI)	2.6 (3.8 x 10^{-4})	1 (1.5 x 10^{-4})	0.5 (7.3 x 10^{-5})
45° bend r/d=0.5	Pa (PSI)	3.2 (4.6 x 10^{-4})	1.3 (1.9 x 10^{-4})	0.6 (8.7 x 10^{-5})
flue exhaust terminal	Pa (PSI)	7 (1 x 10^{-3})	2.8 (4.1 x 10^{-4})	1.4 (2 x 10^{-4})
"T" section for condensate collection	Pa (PSI)	7.7 (1.1 x 10^{-3})	3.1 (4.5 x 10^{-4})	1.5 (2.2 x 10^{-4})
expansion in cross-section	Pa (PSI)	1 (1.5 x 10^{-4})	0.4 (5.8 x 10^{-5})	0.2 (2.9 x 10^{-5})

Tab. 7.e

	Unit	DP		
UG90 max. 70 Pa (0.0101 PSI)		d=80mm (3")	d=100mm (4")	d=120mm (4"3/4)
UG180 max. 70 Pa (0.0101 PSI)		2 x d=80mm (3")	2 x d=100mm (4")	2 x d=120mm (4"3/4)
linear section of pipe	Pa/m (PSI/ft)	7.7 (1.1 x 10^{-3})	2.6 (3.8 x 10^{-4})	1.1 (1.6 x 10^{-4})
90° bend r/d=0.5	Pa (PSI)	19.1 (2.8 x 10^{-3})	7.6 (1.1 x 10^{-3})	3.6 (5.2 x 10^{-4})
90° bend r/d=1	Pa (PSI)	7.6 (1.1 x 10^{-3})	3 (4.4 x 10^{-4})	1.5 (2.2 x 10^{-4})
45° bend r/d=0.5	Pa (PSI)	9.5 (1.4 x 10^{-3})	3.8 (5.5 x 10^{-4})	1.8 (2.6 x 10^{-4})
flue exhaust terminal	Pa (PSI)	21 (3 x 10^{-3})	8.3 (1.2 x 10^{-3})	4 (5.8 x 10^{-4})
"T" section for condensate collection	Pa (PSI)	23 (3.3 x 10^{-3})	9 (1.3 x 10^{-3})	4.3 (6.2 x 10^{-4})
expansion in cross-section	Pa (PSI)	3 (4.4 x 10^{-4})	1.2 (1.7 x 10^{-4})	0.6 (8.7 x 10^{-5})

Tab. 7.f

	Unit	DP			
UG150 max. 260 Pa (0.0377 PSI)		d=80mm (3")	d=100mm (4")	d=120mm (4"3/4)	d=150mm (6")
UG300 max. 260 Pa (0.0377 PSI)		2 x d=80mm (3")	2 x d=100mm (4")	2 x d=120mm (4"3/4)	2 x d=150mm (6")
UG450 max. 260 Pa (0.0377 PSI)		3 x d=80mm (3")	3 x d=100mm (4")	3 x d=120mm (4"3/4)	3 x d=150mm (6")
linear section of pipe	Pa/m (PSI/ft)	22.5 (9.9 x 10^{-3})	7.6 (3.4 x 10^{-4})	4 (1.8 x 10^{-4})	1 (4.4 x 10^{-5})
90° bend r/d=0.5	Pa (PSI)	66 (2.9 x 10^{-3})	26 (1.1 x 10^{-3})	12.3 (5.4 x 10^{-4})	5 (2.2 x 10^{-4})
90° bend r/d=1	Pa (PSI)	27 (1.2 x 10^{-3})	11 (4.9 x 10^{-4})	5 (2.2 x 10^{-4})	2 (8.8 x 10^{-5})
45° bend r/d=0.5	Pa (PSI)	33 (1.5 x 10^{-3})	13 (5.7 x 10^{-4})	6.2 (2.7 x 10^{-4})	2.5 (1.1 x 10^{-4})
flue exhaust terminal	Pa (PSI)	73 (3.2 x 10^{-3})	29 (1.3 x 10^{-4})	13.6 (6 x 10^{-4})	5.5 (2.4 x 10^{-4})
"T" section for condensate collection	Pa (PSI)	79 (3.5 x 10^{-3})	32 (1.4 x 10^{-3})	15 (6.6 x 10^{-4})	6 (2.7 x 10^{-4})
expansion in cross-section	Pa (PSI)	10 (4.4 x 10^{-4})	4 (1.8 x 10^{-4})	1.9 (8.4 x 10^{-5})	0.8 (3.5 x 10^{-5})

Tab. 7.g

7.1.5 Appliance installation with air intake from the room

gaSteam humidifiers can be also installed as type B appliances in accordance with EN 1749:2020, i.e. with air intake from the room where the appliance is installed.

IMPORTANT: for flues greater than 2 m long, a condensate collection section or an appropriate drain is required.

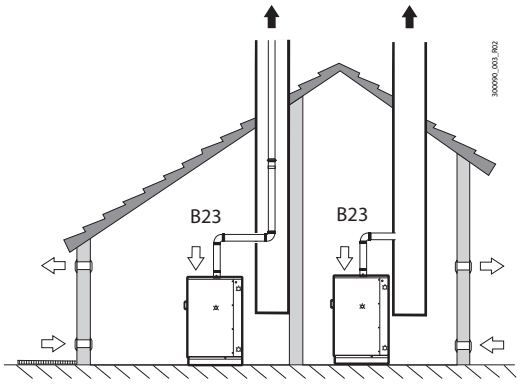

Fig. 7.d

7.1.6 Checks

Verity that the water connections are correct, as follows:

- the feedwater supply line can be closed using a shut-off valve;
- a mechanical filter is installed on the feedwater line;
- water temperature and pressure are within the permitted values;
- the drain pipe is resistant to operating temperatures of 100°C (212°F);
- minimum inside diameter of the drain pipe is 50 mm (1"1/2);
- minimum slope of the drain pipe is greater than or equal to 5°;
- an inspection section is fitted with connection to a condensate drain.

IMPORTANT: once installation has been completed, to eliminate any waste and processing substances that may cause foam when the water is boiling, flush the water intake pipe by directing the water directly into the drain, without running it through the humidifier.

8. STEAM DISTRIBUTION

8.1 Steam distribution

To achieve optimal humidifier efficiency, the steam produced must be introduced into the room uniformly, in order to prevent the formation of droplets and condensation. This is achieved using linear steam distributors. The right steam distributor must be chosen according to the place where the steam is to be introduced.

Information on the absorption distance

The steam introduced into the AHU/duct must be absorbed by the air, and therefore a free space without obstacles where condensation may form is required. This length, downstream of the steam distributor, is defined as the non-wetting distance or "absorption distance" (A_D in the figure).

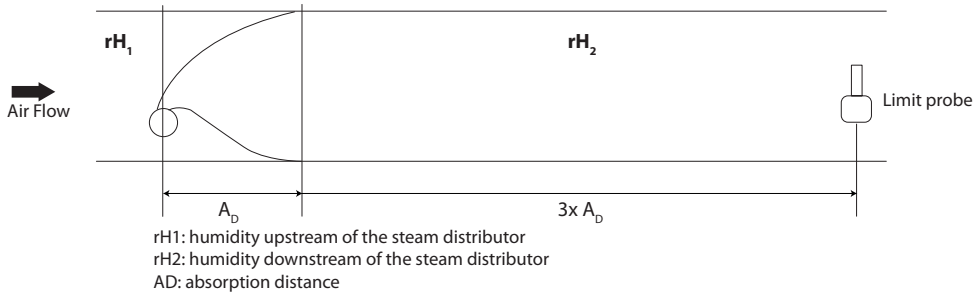

Fig. 8.a

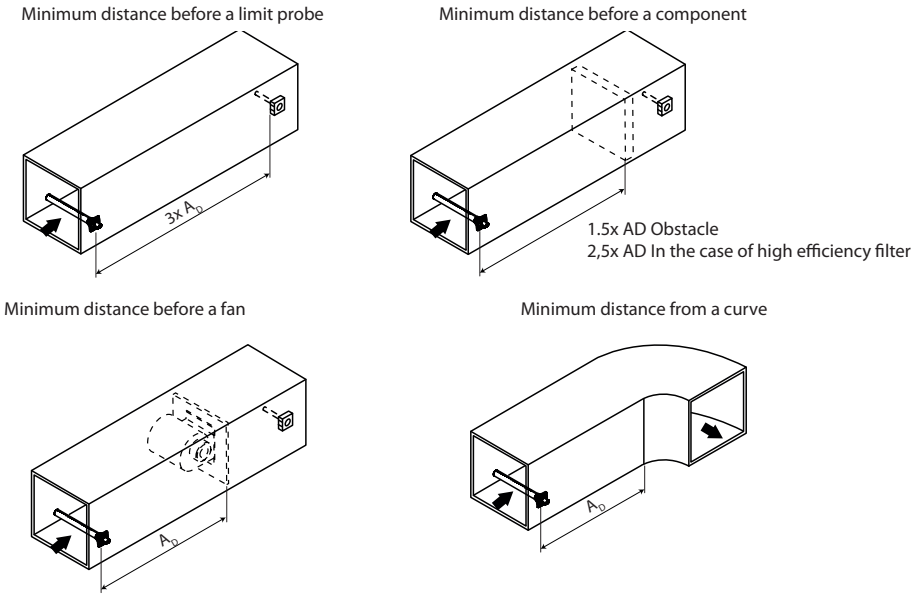

Fig. 8.b

8.1.1 Linear distributors for air ducts or AHUs

The steam distributors for AHU (air handling unit) or duct applications (sold separately) deliver steam along their entire length in order to ensure the shortest not-wetting distance. The distributor must be chosen based on:

- maximum capacity required;
- dimensions of the AHU/duct;
- outlet diameter on the humidifier it is connected to.

Notice: install away from any obstacles (curves, branches, changes in cross-section, grilles, filters, fans). Minimum distance between distributor and obstacle: 1 - 1.5 m (3.3 - 4.9 ft).

Increase the distance in the event of:

- increased air speed in the duct;
- less turbulence.

Mounting instructions (Fig. 8.c):

- drill a series of holes in the wall of the pipe, using the drilling jig of the distributor (found in the packaging of the distributor);
- insert the distributor with the steam outlet holes facing upwards;
- fasten the distributor flange using four screws.

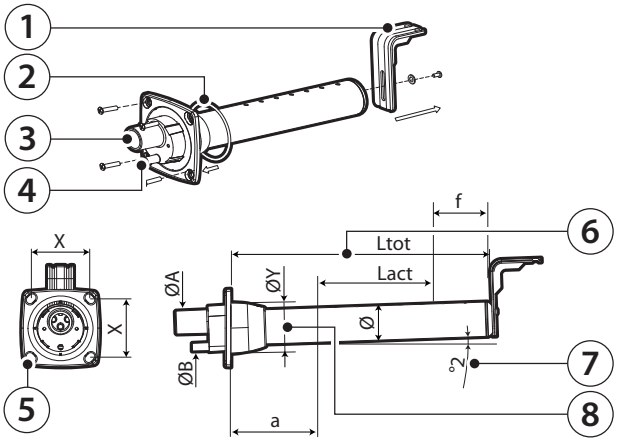

Fig. 8.c

Key

1. L-shaped mounting bracket (where featured)
2. flange gasket
3. steam inlet (ØA)
4. condensate drain (ØB)
5. flange screw (see technical leaflet supplied)
6.
   - Ltot = total length from the support to the end of the pipe, including the cover (depending on the model, see the paragraph "Linear distributors");
   - Lact = actual length used (from the first to the last hole);
   - a = distance from the support to the first hole;
   - f = distance from the last hole to the end of the pipe;

   1. slope (about 2°) for condensate drainage
   2. diameter of the hole in the wall (ØY)

Tab. 8.a

Dimensions - mm (in)	
	DP***D40R0
ØA	40 (1.6)
ØB	10 (0.4)
ØY	89 (3.5)
Ø	60 (2.4)
X	99 (3.9)

Tab. 8.b

Length L			
Code	L tot	max kg/h	lbs/hr
DP085D40R0	834	25	55.07
DP105D40R0	1015	35	77.09
DP125D40R0	1222	45	99.12
DP165D40R0	1636	45	99.12
DP205D40R0	2025	45	99.12
DP085D40RH	834	25	55.07
DP105D40RH	1015	35	77.09
DP125D40RH	1222	45	99.12
DP165D40RH	1636	45	99.12
DP205D40RH	2025	45	99.12
DP060D40RU	600	45	99

Tab. 8.c

IMPORTANT: mount the distributor with a slight slope (at least 2°) to facilitate condensate drainage;
The L-shaped support is supplied with steam distributor models from DP085* to DP205*. For shorter lengths, the support can be supplied as an option (P/N 18C478A088).

8.1.2 High-efficiency linear distributors for air ducts or AHUs

High-efficiency linear distributors (sold separately), can be used in all cases where the formation of condensate needs to be reduced inside the distributor itself. All the information provided in the paragraph on linear distributors still applies; the dimensions and diameters are shown below.

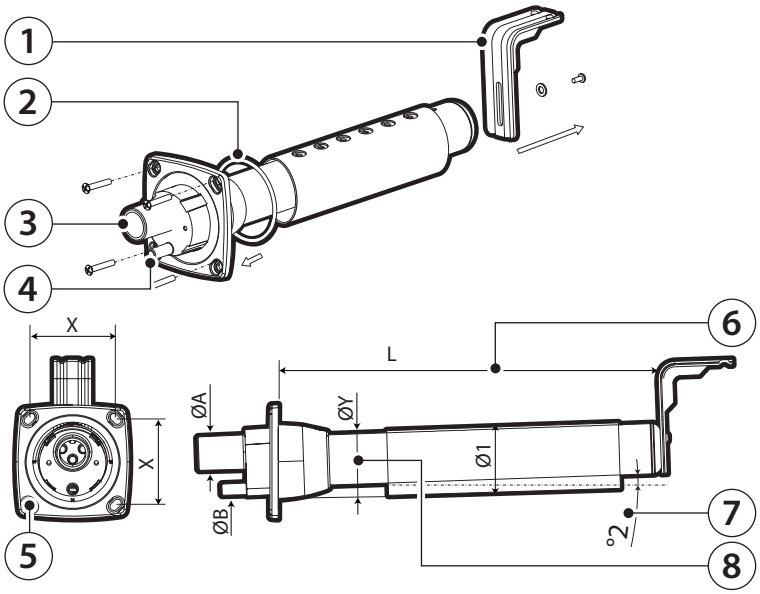

Fig. 8.d

Key

1. L-shaped mounting bracket (where featured)
2. flange gasket
3. steam inlet (ØA)
4. condensate drain (ØB)
5. flange screw (see technical leaflet supplied)
6. L = length (depending on the model)
7. slope (about 2°) for condensate drainage
8. diameter of the hole in the wall (ØY)

Tab. 8.d

	DP***D40RH
ØA	40 (1.6)
ØB	10 (0.4)
ØY	89 (3.5)
Ø	60 (2.4)
Ø1	80 (3.1)
X	99 (3.9)

Tab. 8.e

8.1.3 Linear distributor models and typical installations

				gaSteam					
humidifier outlet Ø mm				80 (3.1")		80 (3.1")	2 x 80 (2 X 3.1")	2 x 80 (2x 3.1")	3 x 80 (3x 3.1")
humidifier capacity kg/h				45	90	150	180	300	450
distributor inlet (ØA) mm (in)	max distributor capacity kg/h (lbs/h)	minimum width of duct/AHU mm (in)	part number	UG045	UG090	UG150	UG180	UG300	UG450
40 (1.6")	25 (55)	850 (33.5")	DP085D40RH	2	(4)**			See Fig. 8.h	
40 (1.6")	35 (77)	1050 (41.3")	DP105D40RH	2	(4)**				
40 (1.6")	45 (99)	1250 (49.2")	DP125D40RH	2	2	4	4		
40 (1.6")	45 (99)	1650 (65")	DP165D40RH	2	2	4	4		
40 (1.6")	45 (99)	2050 (80.7")	DP205D40RH		2	4	4		
40 (1.6")	25 (55)	850 (33.5")	DP085D40R0	2	(4)**				
40 (1.6")	35 (77)	1050 (41.3")	DP105D40R0	2	(4)**				
40 (1.6")	45 (99)	1250 (49.2")	DP125D40R0	2	2	4	4		
40 (1.6")	45 (99)	1650 (65")	DP165D40R0	2	2	4	4		
40 (1.6")	45 (99)	2050 (80.7")	DP205D40R0		2	4	4		
40 (1.6")	45 (99)	600 (23.6")	DP060D40RU	2	2	4	4		

Tab. 8.f

if the duct does not feature the required width for the distributor, two shorter distributors (numbers indicated in brackets) can be used, branching the steam hose.

*: use "Y" kit UEKY000000, 40 mm (1.6") inlet and 2 x 30 mm (1.2") outlets
**: use "Y" kit UEKY40X400, 40 mm (1.6") inlet and 2 x 40 mm (1.6") outlets

For the typical installations of linear distributors, see the figure below:

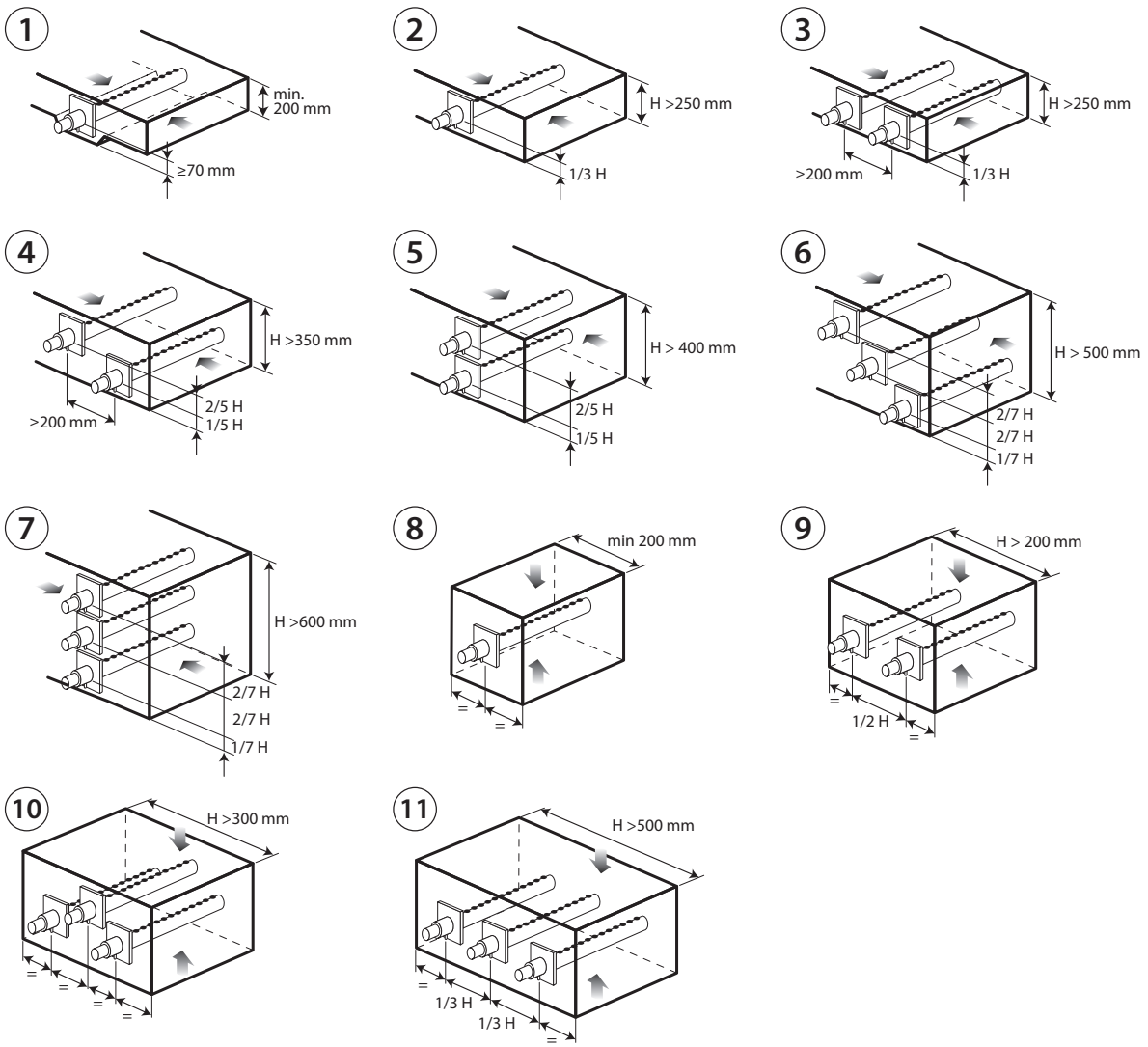

Fig. 8.e

Note: the arrows indicate the air flow.

Vertical installation of DP series steam distributors.

Bracket for vertical mounting of DP* series linear steam distributors.

DP00VM3000	bracket for distributors with Ø 30 mm steam inlet (DP***D30R*);
DP00VM4000	bracket for distributors with Ø 40 mm steam inlet (DP***D40R*);

Tab. 8.g

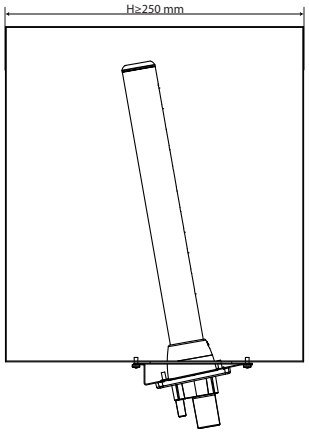

Fig. 8.f

Typical installations of gaSteam series gas-fired humidifiers:

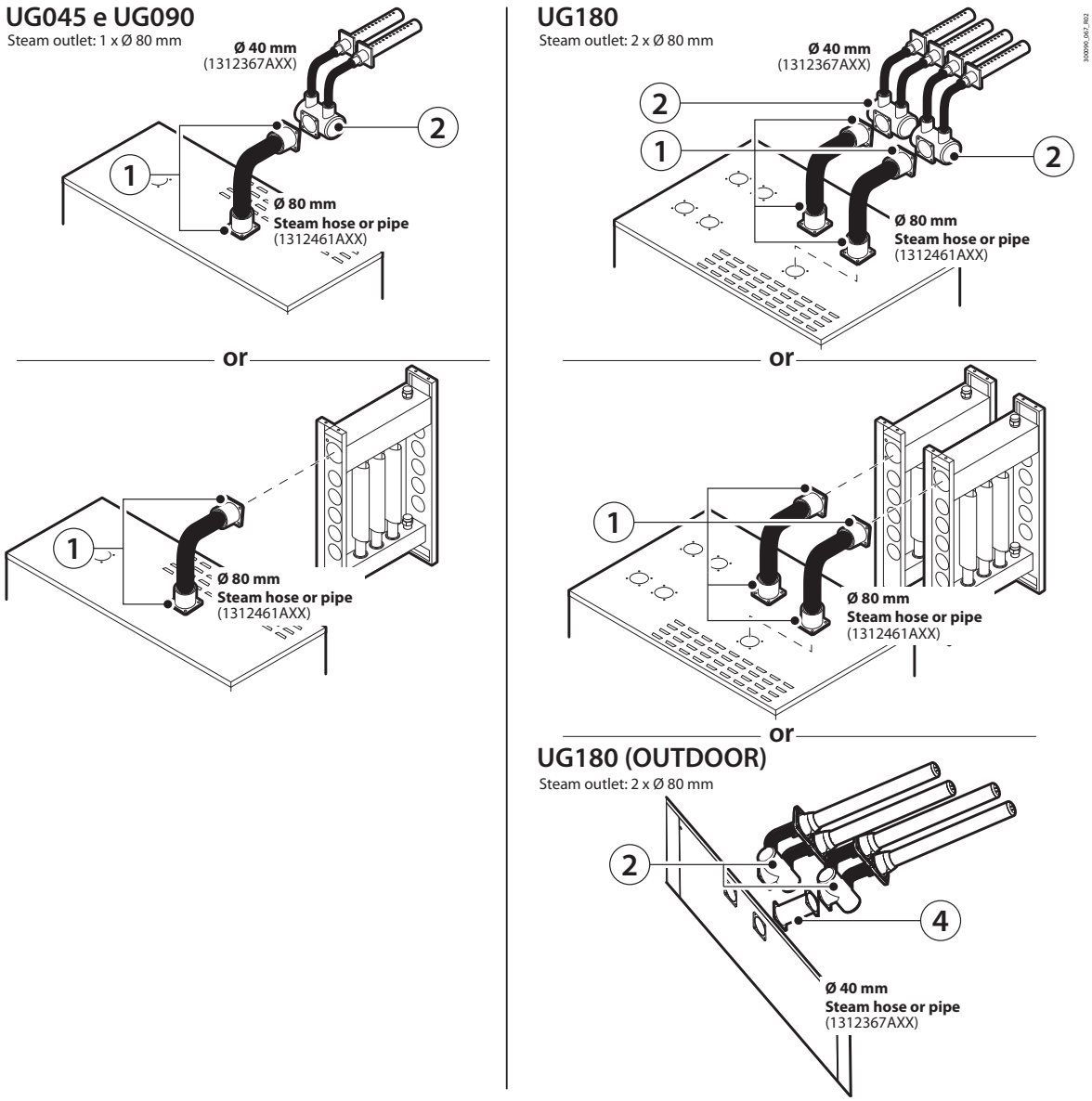

Fig. 8.g

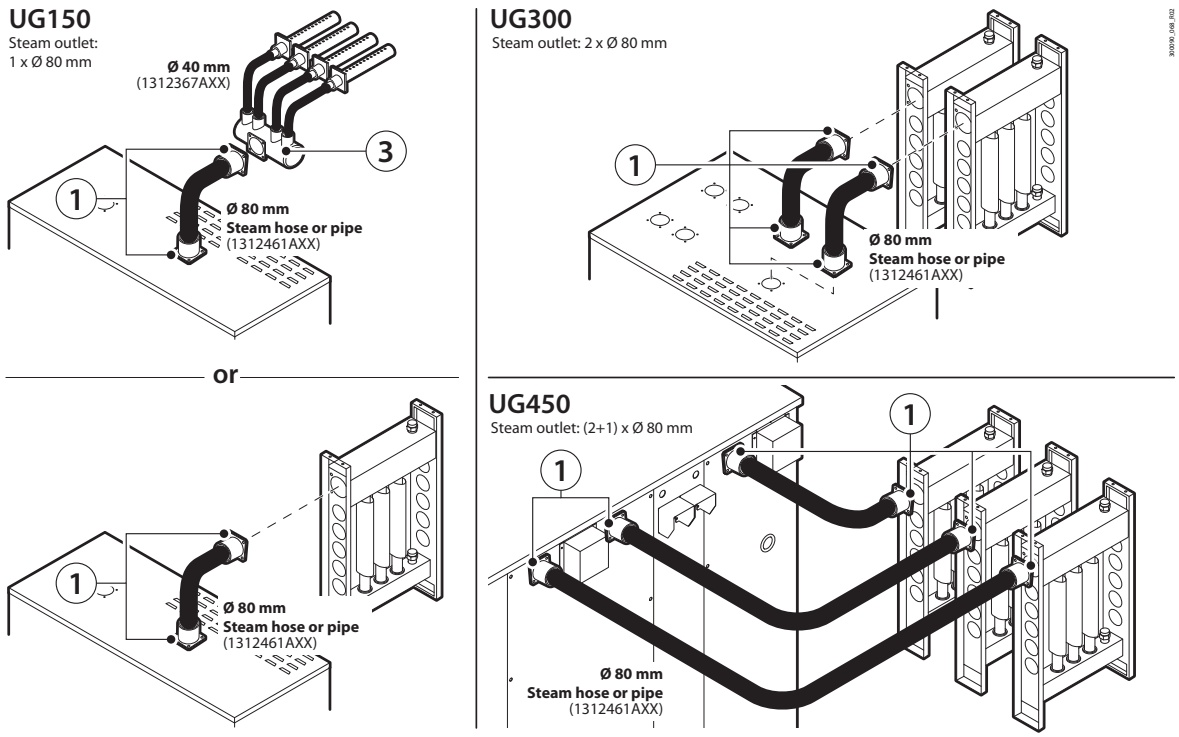

Fig. 8.h

Key:

Ref	Code
1	SAKIT80100
2	SAKIT40200
3	SAKIT40400
4	SAKIX80100

Tab. 8.h

8.1.4 Steam hose

Warnings:

- use CAREL hoses (max length = 4 m / 3.3 ft, see par. 8.1.5);
- avoid the formation of pockets or traps (these cause condensate accumulation);
- avoid choking the hose with sharp bends or twists;
- use metal clamps to secure the ends of the hose to the connections on the humidifier and the steam distributor so that they do not come loose due to the high temperatures;
- avoid strain, including mechanical stress on the boiler steam outlet spigot;
- do not use a steam hose with a smaller cross-section than the diameter suggested in the manual;
- do not install valves or other similar devices in the section of steam hose between the humidifier and the distributor;
- do not use the steam hose outdoors to avoid premature deterioration;
- allow space for maintenance in the area surrounding the steam hoses;
- if using two steam distributors connected to a single outlet, install a "Y" fitting as close as possible to the distributors. This will reduce the formation of condensate.

Steam hose

P/N	Diameter mm (in)	Maximum radius of curvature mm (in)
1312461AXX	ø 80 (3)	250 (10)
1312367AXX	ø 40 (1"1/2)	110 (4)

Tab. 8.i

8.1.5 Steam hose models

humidifier model:	UG045	UG090	UG150	UG180	UG300	UG450
steam outlet Ø mm (in):	1 x 80 (3.1")	1 x 80 (3.1")	1 x 80 (3.1")	2 x 80 (3.1")	2 x 80 (3.1")	3 x 80 (3.1")
maximum capacity kg/h (lb/h):	45 (99)	90 (198)	150 (330)	180 (396)	300 (661)	450 992()
1312461AXX	√	√	√	√	√	√

Tab. 8.j

8.1.6 Condensate drain pipe

During operation of the humidifier, part of the steam may condense, causing a decline in efficiency and noise (gurgling). To drain the condensate, connect to the distributor (Fig. 8.g) drain spigot (Fig. 8.f) a drain pipe with a trap and a minimum slope of 5°. The condensate drain pipe must be connected to the drain water pipe.

Condensate drain pipe

P/N	Diameter mm (in)
1312368AXX	ø 10 (3/8)
1312353APG	ø 7 (1/4)
CHOSE00516 (UL version)	ø 7.9 (5/16)
CHOSE0038 (UL version)	ø 9.5 (3/8)

Tab. 8.k

IMPORTANT the condensate drain trap must be filled with water prior to turning on the humidifier.

Below are some requirements and installation examples of the steam hoses and condensate drain pipes:

- instructions provided in this chapter, the steam outlet hoses are aimed upwards and the distributor has an upwards slope of at least 2°;
- any curves in the pipes or hoses are sufficiently wide (radius > 500 mm - 20 in) so as to not cause bending or choking;
- the paths of the steam hose and condensate pipe comply with the instructions provided in this chapter;
- the slope of the steam hose is sufficient to allow correct condensate drainage (> 5° for downward sections);
- the slope of the condensate drain pipe is at least 5° at every point;
- the condensate drain pipe is fitted with a drain trap (filled with water before starting) to prevent steam from escaping;
- do not use a condensate drain pipe with a smaller cross-section than the diameter suggested in the manual;
- the drain trap must be positioned under the steam distributor. The minimum distance from the distributor to the highest point of the drain trap must be at least 300mm (11.81in).

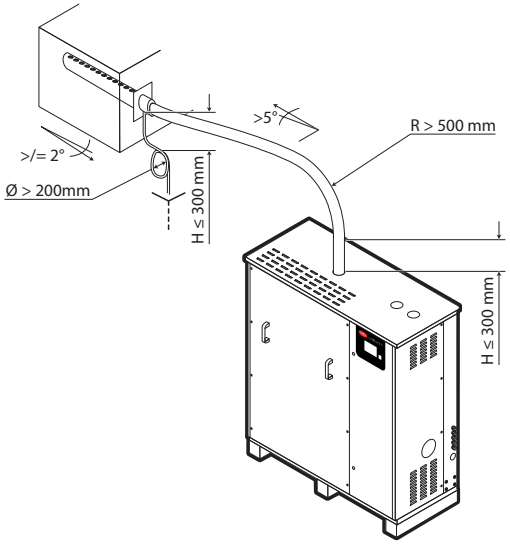

Fig. 8.i

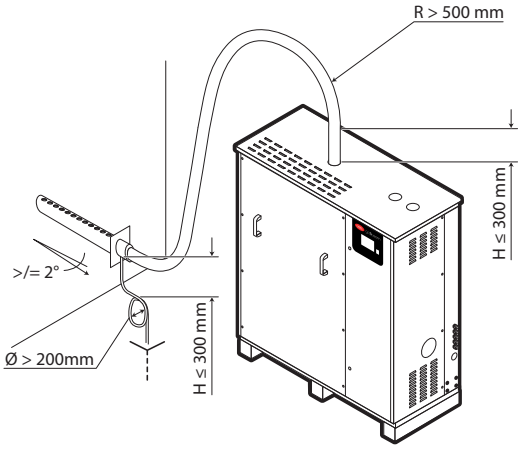

Fig. 8.j

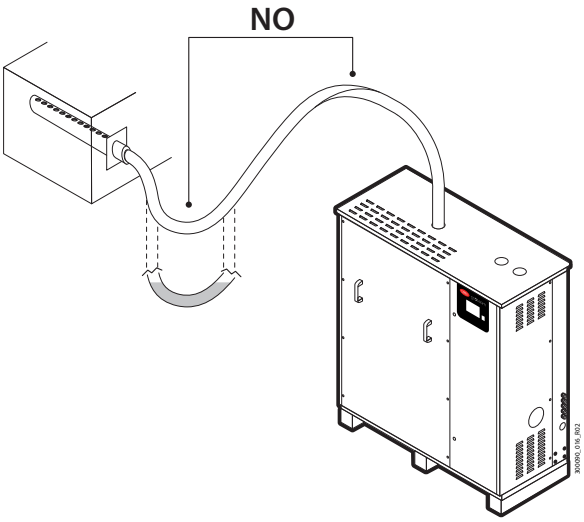

Fig. 8.k

Outlet pressure limits

The back-pressure at the boiler outlet, either positive or negative, depends both on the relative pressure in the duct/AHU and the pressure drop in the steam hose, due to bends or adapters, and the steam distributor. The steam hoses have a pressure drop of around 150 Pa/m (0.021 psi) (in compliance with the maximum recommended flow-rate). The DP* series linear distributors have a pressure drop of around 25 Pa (0.003psi) (in compliance with the maximum recommended flow-rate).

Considering these values, the boiler outlet pressure must be:

- boiler outlet pressure > 150 [Pa/m]* steam hose length [m] + 25 [Pa] DP + pressure in duct/AHU [Pa]

Boiler outlet pressure values for gaSteam:

	UG045	UG090	UG150	UG180	UG300	UG450
pressure limits at boiler outlet Pa (PSI)	0 - 2000 (0 - 0.290)					

Tab. 8.l

Notice: a pressure of around -200 Pa (-0.029 psi) at the boiler outlet corresponds to around 20 mm (0.78") of water inside the boiler (for all sizes).

Guidelines for sizing the steam distribution hose

Below are the tables for sizing the maximum length of the Carel steam hose based on the diameter.

Carel steam hose					
Hose inside diameter		Maximum steam load		Maximum distance	
[mm]	[inches]	[kg/h]	[lbs/h]	[m]	[ft]
22	0.866	9	20	4	13
30	1.181	21	46	4	13
40	1.574	45	100	4	13
80	3.149	150	330	4	13

- the values shown in the table refer to a linear section of pipe;
- the data shown in the table refer to steam at atmospheric pressure;
- the maximum pressure drop considered in this table is 1300Pa.

Tab. 8.m

When sizing the humidification load, the loss due to condensate along the steam hose must also be taken into consideration. The estimated condensate per linear metre according to the diameter of the Carel steam hose are shown below.

	Hose inside diameter		Condensate	
	[mm]	[inches]	[kg/h/m]	[lbs/hr/ft]
Steam hose	22	0.866	0.15	0.33
	30	1.181	0.18	0.40
	40	1.574	0.22	0.48
	80	3.149	0.33	0.73

- the data shown in the table refer to steam at atmospheric pressure;
- the data refer to Carel steam hoses without thermal insulation;
- the data refer to an ambient temperature of 20°C (68°F).

Tab. 8.n

If the distance between the humidifier and the steam distributor is greater than 4 m, a suitably-sized steel (recommended) or copper pipe can be used, referring the data shown in the table below.

The tables therefore show the diameters of the pipes to be installed (not supplied by Carel) and the corresponding estimated condensate formation according to the distance to be covered.

Steel or copper pipe					
Pipe inside diameter		Maximum steam load		Maximum distance	
[mm]	[inches]	[kg/h]	[lbs/h]	[m]	[ft]
40	1"1/2	45	100	8	26
50	2	45	100	15	49
65	2"1/2	90	198	22	72
80	3	180	397	20	66
100	4	300	660	25	82

Tab. 8.o

- the values shown in the table refer to a linear section of pipe;
- the data shown in the table refer to steam at atmospheric pressure;
- the maximum pressure drop considered in this table is 1300Pa.

	Condensate							
	Pipe inside diameter		Non-insulated pipe		Insulated pipe		Insulation thickness	
	[mm]	[inches]	[kg/h/m]	[lbs/hr/ft]	[kg/h/m]	[lbs/hr/ft]	[mm]	[inches]
steel or copper pipe	40	1"1/2	0.27	0.59	0.02	0,044	50	1.96
	50	2	0.32	0.70	0.03	0,066	50	1.96
	65	2"1/2	0.38	0.83	0.03	0,066	50	1.96
	80	3	0.46	1.00	0.03	0,066	60	2.36
	100	4	0.54	1.19	0.03	0,066	70	2.75

Tab. 8.p

- the data shown in the table refer to steam at atmospheric pressure;
- the data refer to an ambient temperature of 20°C (68°F).

Tips for the correct installation of steam and condensate pipes for lengths greater than 4 m (13 ft):

- the steam distribution line must have "T" fittings for the condensate drain. The distance between two "T" fittings must not exceed 5 m (16 ft);
- downstream of each "T" fitting there must be a drain with a train trap, minimum diameter 200 mm (8"), to prevent steam from escaping;
- the condensate drain line must always be positioned lower than the steam line;
- for steam lines that change from horizontal to vertical, a condensate drain must be provided at the lowest point on the line;
- the condensate drain line must have a minimum slop of 5° to facilitate drainage;
- condensate from the ultimateSAM distributor or more complex systems must be connected to water temperature reduction devices (if required) before being discharged into the building's drain line. Excessive quantities of condensate (for example, deriving from multiple ultimateSAM distributors) must not be carried into the humidifier;
- each individual condensate drain line must be fitted with a drain trap before running to the main drain line;
- the condensate drain line must have no restrictions in size and the drain trap must be filled with water before starting.

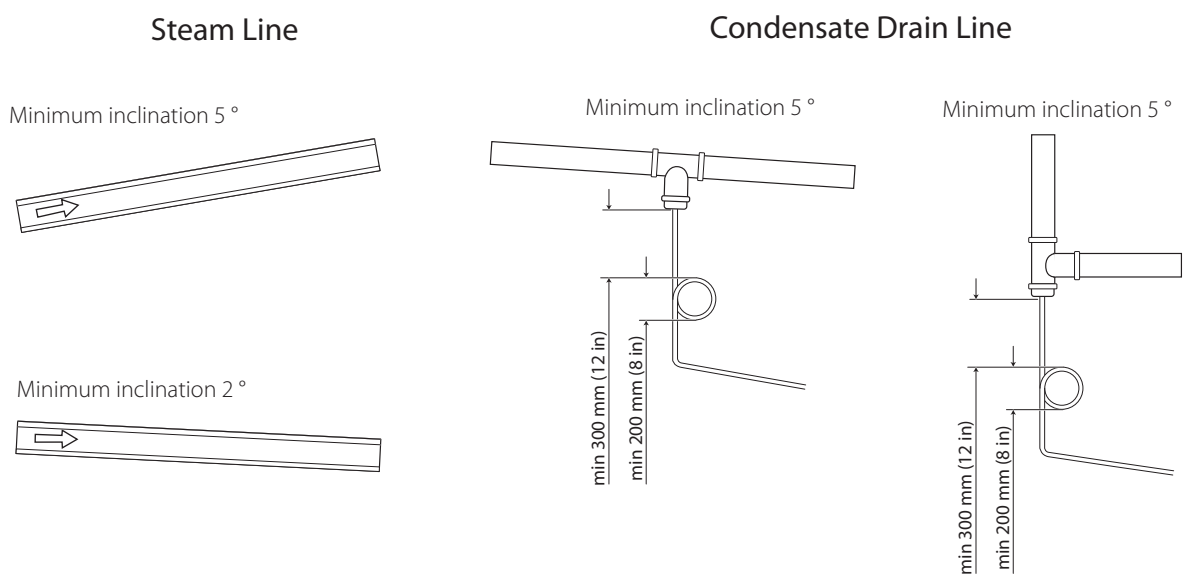

Fig. 8.l

9. ELECTRICAL CONNECTIONS

9.1 Electrical connections

DANGER: in accordance with the regulations in force in the country where the humidifier is installed, the manufacturer recommends using a suitable circuit breaker to protect against overload and overcurrent upstream of the humidifier's power line. The installer is responsible for selecting and installing this device (not supplied by the manufacturer).

9.1.1 Wiring requirements

The cables entering the humidifier must pass through the cable glands on the side (1 - Fig. 9.a) or at the bottom (2 - Fig. 9.a, UL outdoor versions only).

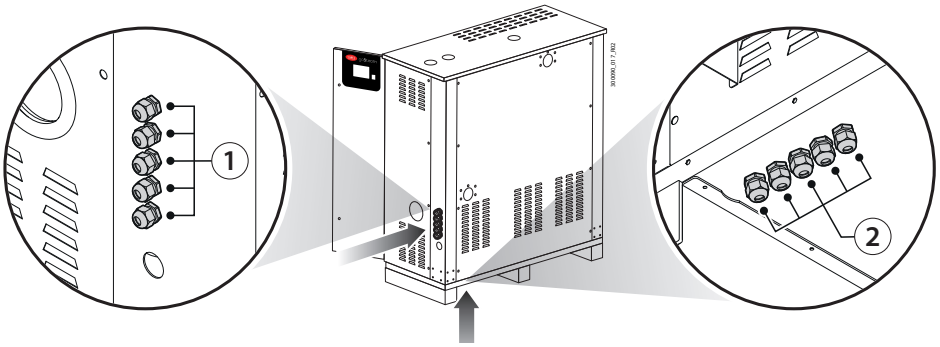

Fig. 9.a

9.1.2 Power cable

Before making the electrical connections, disconnect the unit from the mains power supply. Check that the humidifier's power supply voltage corresponds to the rated value shown inside the electrical panel.

230 V/50 Hz version
Run the power and earth wires into the electrical panel through the tear-resistant cable gland supplied, and connect the ends to terminals on the DIN rail.

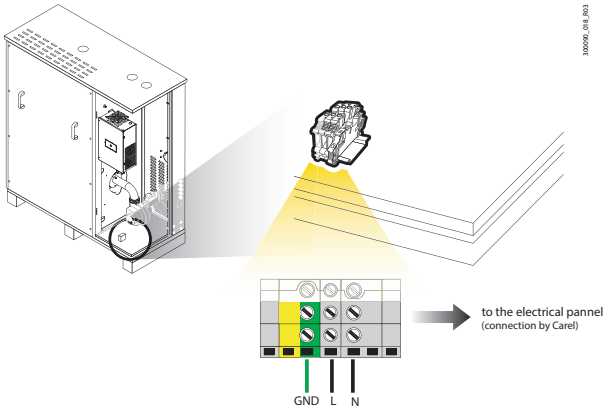

Fig. 9.b

115V/60Hz version
Run the power and earth wires into the electrical panel through the tear-resistant cable gland supplied, and connect the ends to the terminals on the DIN rail, connected directly to the main transformer (primary 115 V, secondary 230 V).

Notice: to avoid unwanted interference, the power cables should be kept separate from the probe signal cables.

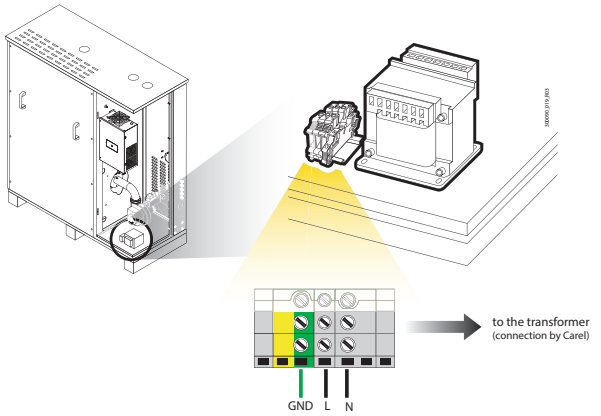

Fig. 9.c

IMPORTANT: connect the yellow-green wire to the earth terminal (GND).

9.1.3 Power supply

The humidifier power line must be fitted by the installer with a disconnect switch and protection fuses. The table shows the recommended size of the power cable and fuse ratings. These data are purely indicative; local regulations must always prevail.

	power supply		rated characteristics									
mod.	temperat. °C (°F)	voltage V (1)	current A		power W (2)		produc-tion kg/h (lbs/h) (3)	no. of heaters	cable size mm2 AWG (2)		line fuses A - type (2)	
			UG line	heater line	UG line	heater line			UG line	heater line	UG line	heater line
UG045HD005	0 to 45 (32 to 113)	230V 1PH~ 50 Hz	0.82	-	187	-	45 (100)	-	2.5 - AWG 14	-	10 - F	-
UG045YD005	0 to 45 (32 to 113)	230V 1PH~ 50 Hz	1.08	-	248	-	45 (100)	-	2.5 - AWG 14	-	10 - F	-
	-25 to 45 (-13 to 113)(*)	230V 1PH~ 50 Hz	1.08	4.34	248	1000	45 (100)	1	2.5 - AWG 14	2.5 - AWG 14	10 - F	10 - F
	-40 to 45 (-40 to 113)(**)	230V 1PH~ 50 Hz	1.08	8.69	248	2000	45 (100)	2	2.5 - AWG 14	2.5 - AWG 14	10 - F	16 - F
UG090HD005	0 to 45 (32 to 113)	230V 1PH~ 50 Hz	1.11	-	255	-	90 (200)	-	2.5 - AWG 14	-	10 - F	-
UG090YD005	0 to 45 (32 to 113)	230V 1PH~ 50 Hz	1.37	-	315	-	90 (200)	-	2.5 - AWG 14	-	10 - F	-
	-25 to 45 (-13 to 113)(*)	230V 1PH~ 50 Hz	1.37	4.34	315	1000	90 (200)	1	2.5 - AWG 14	2.5 - AWG 14	10 - F	10 - F
	-40 to 45 (-40 to 113)(**)	230V 1PH~ 50 Hz	1.37	8.69	315	2000	90 (200)	2	2.5 - AWG 14	2.5 - AWG 14	10 - F	16 - F
UG150HD005	0 to 45 (32 to 113)	230V 1PH~ 50 Hz	1.34	-	309	-	150 (330)	-	2.5 - AWG 14	-	10 - F	-
UG150YD005	0 to 45 (32 to 113)	230V 1PH~ 50 Hz	1.60	-	368	-	150 (330)	-	2.5 - AWG 14	-	10 - F	-
	-25 to 45 (-13 to 113)(*)	230V 1PH~ 50 Hz	1.60	4.34	368	1000	150 (330)	1	2.5 - AWG 14	2.5 - AWG 14	10 - F	10 - F
	-40 to 45 (-40 to 113)(**)	230V 1PH~ 50 Hz	1.60	8.69	368	2000	150 (330)	2	2.5 - AWG 14	2.5 - AWG 14	10 - F	16 - F
UG180HD005	0 to 45 (32 to 113)	230V 1PH~ 50 Hz	1.69	-	389	-	180 (400)	-	2.5 - AWG 14	-	10 - F	-
UG180YD005	0 to 45 (32 to 113)	230V 1PH~ 50 Hz	2.21	-	509	-	180 (400)	-	2.5 - AWG 14	-	10 - F	-
	-25 to 45 (-13 to 113)(*)	230V 1PH~ 50 Hz	2.21	4.34	509	1000	180 (400)	1	2.5 - AWG 14	2.5 - AWG 14	10 - F	10 - F
	-40 to 45 (-40 to 113)(**)	230V 1PH~ 50 Hz	2.21	8.69	509	2000	180 (400)	2	2.5 - AWG 14	2.5 - AWG 14	10 - F	16 - F
UG300HD005	0 to 45 (32 to 113)	230V 1PH~ 50 Hz	2.17	-	500	-	300 (660)	-	2.5 - AWG 14	-	10 - F	-
UG300YD005	0 to 45 (32 to 113)	230V 1PH~ 50 Hz	2.69	-	619	-	300 (660)	-	2.5 - AWG 14	-	10 - F	-
	-25 to 45 (-13 to 113)(*)	230V 1PH~ 50 Hz	2.69	4.34	619	1000	300 (660)	1	2.5 - AWG 14	2.5 - AWG 14	10 - F	10 - F
	-40 to 45 (-40 to 113)(**)	230V 1PH~ 50 Hz	2.69	8.69	619	2000	300 (660)	2	2.5 - AWG 14	2.5 - AWG 14	10 - F	16 - F
UG450YD005	0 to 45 (32 to 113)	230V 1PH~ 50 Hz	4.03	-	927	-	450 (990)	-	2.5 - AWG 14	-	10 - F	-
	-25 to 45 (-13 to 113)(*)	230V 1PH~ 50 Hz	4.03	8.69	927	2000	450 (990)	2	2.5 - AWG 14	2.5 - AWG 14	10 - F	16 - F
	-40 to 45 (-40 to 113)(**)	230V 1PH~ 50 Hz	4.03	17.39	927	4000	450 (990)	4	2.5 - AWG 14	6 - AWG 10	10 - F	25 - F

Tab. 9.a

(1) Tolerance allowed on the nominal mains voltage: -15% +10%
Tolerance allowed on the nominal mains frequency: ± 1 %.

(2) Recommended values; referred to cables laid in closed PVC or rubber conduits 20 m long.

(3) Instant steam production: average steam production may be affected by external factors, such as: ambient temperature, water quality, steam distribution system.

(*) = Optional 1 heater.

(**) = Optional 2 heaters.

mod.	power supply		rated characteristics									
	temperature °C (°F)	voltage V (1)	current A		power W (2)		produc-tion kg/h (lbs/h) (3)	no. of heaters	cable size mm² AWG (2)		line fuses A - type (2)	
			UG line	heater line	UG line	heater line			UG line	heater line	UG line	line heaters
UG045H1105	0 to 45 (32 to 113)	115V 1PH~ 60 Hz	1.64	-	187	-	45 (100)	-	2.5 - AWG 14		10 - F	
UG045X1105	-40 to 45 (-40 to 113)	115V 1PH~ 60 Hz	2.16	17.39	248	2000	45 (100)	2	2.5 - AWG 14	6 - AWG 10	10 - F	25 - F
UG090H1105	0 to 45 (32 to 113)	115V 1PH~ 60 Hz	2.22	-	255	-	90 (200)	-	2.5 - AWG 14		10 - F	
UG090X1105	-40 to 45 (-40 to 113)	115V 1PH~ 60 Hz	2.71	17.39	312	2000	90 (200)	2	2.5 - AWG 14		10 - F	25 - F
UG150H1105	0 to 45 (32 to 113)	115V 1PH~ 60 Hz	2.68	-	309	-	150 (330)	-	2.5 - AWG 14		10 - F	
UG150X1105	-40 to 45 (-40 to 113)	115V 1PH~ 60 Hz	3.20	17.39	368	2000	150 (330)	2	2.5 - AWG 14	6 - AWG 10	10 - F	25 - F
UG180H1105	0 to 45 (32 to 113)	115V 1PH~ 60 Hz	3.38	-	389	-	180 (400)	-	2.5 - AWG 14		10 - F	
UG180X1105	-40 to 45 (-40 to 113)	115V 1PH~ 60 Hz	4.42	17.39	509	2000	180 (400)	2	2.5 - AWG 14	6 - AWG 10	10 - F	25 - F
UG300H1105	0 to 45 (32 to 113)	115V 1PH~ 60 Hz	4.34	-	500	-	300 (660)	-	2.5 - AWG 14		10 - F	
UG300X1105	-40 to 45 (-40 to 113)	115V 1PH~ 60 Hz	5.38	17.39	619	2000	300 (660)	2	2.5 - AWG 14	6 - AWG 10	10 - F	25 - F
UG450X1105	-40 to 45 (-40 to 113)	115V 1PH~ 60 Hz	8.06	34.78	927	4000	450 (990)	4	2.5 - AWG 14	16 - AWG 4	10 - F	50 - F

Tab. 9.b

(1) Tolerance allowed on the nominal mains voltage: -15% +10%
Tolerance allowed on the nominal mains frequency: ± 1 %.
(2) Recommended values; referred to cables laid in closed PVC or rubber conduits 20 m long.
(3) Instant steam production: average steam production may be affected by external factors, such as: ambient temperature, water quality, steam distribution system.

Notice: the power cable must be sized in compliance with the local regulations in force. The humidifier power supply line must be equipped with an disconnect switch and protection fuses suitably sized for the short-circuit current, to be fitted by the installer.

Notice: on the outdoor models, the heaters, where featured, must have its own independent power supply line, not shared with the humidifier.

9.1.4 Auxiliary circuit transformer

The multi-voltage auxiliary circuit transformer has a primary winding for 230 V (protected by fuses, 10.3x38 mm) and a secondary winding (24 V). The transformer is connected and checked in the factory, according to the rated voltage.

9.1.5 Main control board

The auxiliary connections must be made by inserting the cables into the electrical panel compartment through the cable glands on the side (1 - Fig. 9.i) or on the bottom of the humidifier (2 - Fig. 9.a, UL outdoor versions only). It is recommended to secure the probe, remote ON/OFF contact connection cables etc. with appropriate cable ties, in order to prevent disconnection.

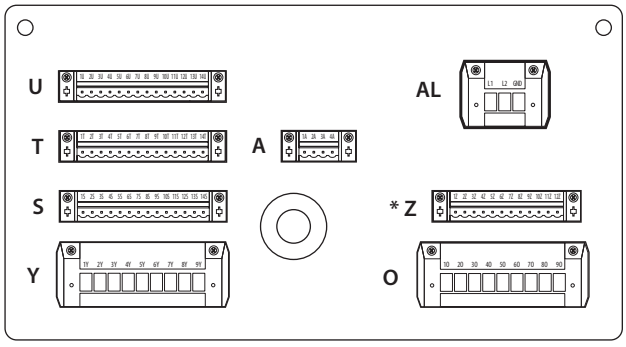

Fig. 9.d

Notice: terminal block Z is only available on UG180.

c.pHC control board

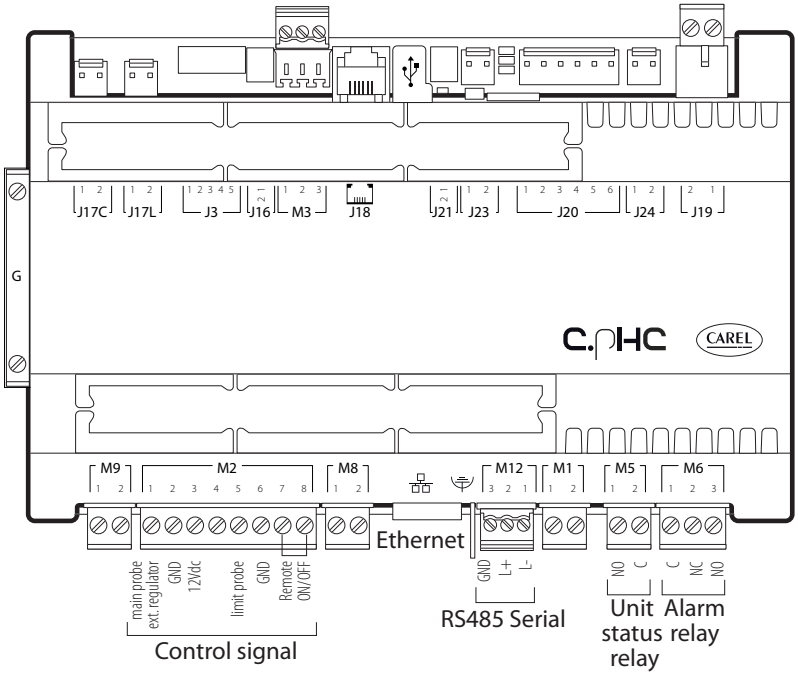

Fig. 9.e

Terminal		Function	Electrical specifications
M1	M1.1	GND (G0)	
	M1.2	Controller power supply	24Vac +10%/-15% 50/60Hz
M2	M2.1	Main room probe input or signal from external controller	0 to 1V, 0 to 10V, 2 to 10V, 0 to 20mA, 4 to 20mA, NTC 10 kΩ at 25 °C
	M2.2	GND	
	M2.3	Probe power supply (+G)	+12 Vdc, maximum current that can be delivered 50 mA; Short-circuit protection
	G	Probe power supply (+G)	0-10 V
	M2.4	Digital input for backup/rotation function	Maximum output current: 5 mA: Maximum voltage with open contact: 13Vdc
	M2.5	Limit humidity probe signal input	0 to 1V, 0 to 10V, 2 to 10V, 0 to 20mA, 4 to 20mA, NTC
	M2.6	GND	
	M2.7	GND	
	M2.8	Remote on/off contact digital input	Maximum output current: 5 mA: Maximum voltage with open contact: 13Vdc
M3	M3.1		Tx/Rx-
	M3.2	Fieldbus	Tx/Rx+
	M3.3		GND
M5	M5.1	Unit status contact (NO)	250 Vac; 2 A with resistive load; 2 A with inductive load
	M5.2	Unit status contact common	
M6	M6.1	Alarm common	
	M6.2	NC alarm contact	250 Vac; 2 A with resistive load; 2 A with inductive load
	M6.3	NO alarm contact	
M8	M8.1	Production request analogue output	Output voltage range: 0-10 V, max 10 mA
	M8.2	GND	
M9	M9.1	Backup and rotation contact common	250 Vac; 2 A with resistive load; 2 A with inductive load
	M9.2	Backup and rotation NO contact	
M11		Ethernet port	
M12	M12.1		Tx/Rx-
	M12.2	BMS 485	Tx/Rx+
	M12.3		GND
		Earth connection	
J18		pLAN/display terminal	
J19	J19.1	Auxiliary/blower contact	250 Vac; 2 A with resistive load; 2 A with inductive load
	J19.2	Auxiliary/blower contact common (NO)	
		USB port (type A)	
		Ethernet RJ45 port	

Tab. 9.c

9.2 Steam production control signals

Depending on the type of signal used, steam production can be enabled and/or managed in different ways (ON/OFF or modulating).

IMPORTANT the probe inputs are protected against short-circuits, and the maximum current delivered (3U) is 50 mA. Despite this, it is recommended to configure the "Control type" before connecting the probes to the terminals.

To help users configure the humidifier, a screen index is shown at the top right of the display. The screen index corresponds to the sequence in each menu in order to reach the specific page.

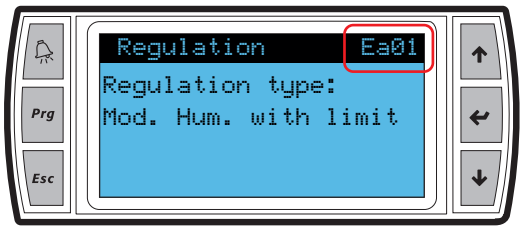

Fig. 9.f

Steam production can be started by:

HUMIDISTAT (ON/OFF operation):
- connect terminals 1U and 2U (production request) to a humidistat;
- short-circuit terminals 7U and 8U (jumper) to enable production;
- to enable ON/OFF operation, set:

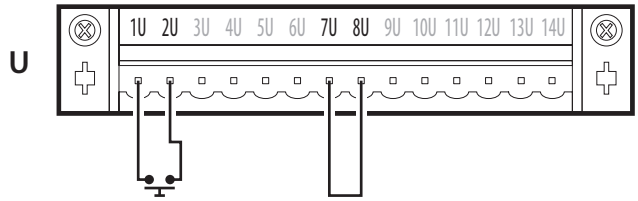

Fig. 9.g

Index	Parameter	Description
Ea01	Control type	External ON/OFF signal
Ea04	Maximum production	25-100% of rated production

Tab. 9.d

HUMIDISTAT and REMOTE CONTACT (ON/OFF operation)
- connect terminals 1U and 2U (production request) to a humidistat;
- connect inputs 7U and 8U (enable) to a remote contact (e.g.: switch, timer,...);
- to enable ON/OFF operation, set:

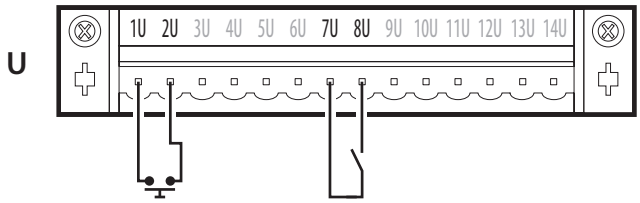

Fig. 9.h

Index	Parameter	Description
Ea01	Control type	External ON/OFF signal
Ea04	Maximum production	25-100% of rated production

Tab. 9.e

Steam production can be enabled and controlled by:
EXTERNAL PROPORTIONAL CONTROLLER (modulating operation)
- short-circuit terminals 7U and 8U (jumper) to enable production;
- connect terminals 1U and 2U (production request) to an external controller;
- to enable control, set:

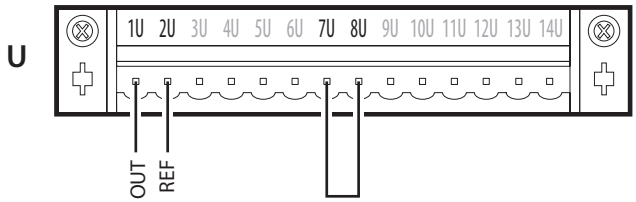

Fig. 9.i

Index	Parameter	Description
Ea01	Control type	proportional to external signal
Ea03	Proportional band	Set: Hysteresis (0-100%) - Minimum production (25%-00%) - Maximum production (25%-100%)
Ec01	Type of main probe	Select from: 0 - 1V, 0 - 10V, 2 - 10V, 0 - 20mA, 4 - 20mA

Tab. 9.f

EXTERNAL PROPORTIONAL CONTROLLER and REMOTE CONTACT (modulating operation)

- connect terminals 1U and 2U (production request) to a humidistat;
- connect inputs 7U and 8U (enable) to a remote contact (e.g.: switch, timer,...);
- to enable control, set:

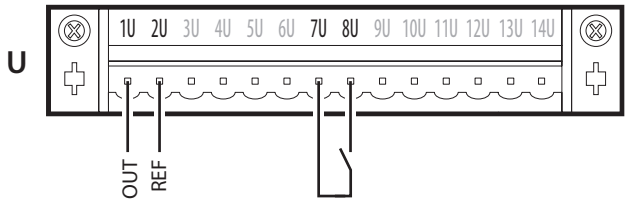

Fig. 9.j

Index	Parameter	Description
Ea01	Control type	proportional to external signal
Ea03	Proportional band	Set: Hysteresis (0-100%) - Minimum production (25%-00%) - Maximum production (25%-100%)
Ec01	Type of main probe	Select from: 0 - 1V, 0 - 10V, 2 - 10V, 0 - 20mA, 4 - 20mA

Tab. 9.g

EXTERNAL PROPORTIONAL CONTROLLER and REMOTE CONTACT (modulating operation) with LIMIT PROBE

- short-circuit terminals 7U and 8U (jumper) to enable production; alternatively connect terminals 7U – 8U to a remote contact (e.g.: switch, timer,...);
- connect terminals 1U and 2U (production request) to an external controller;
- connect the active limit probe to terminals 5U, 3U (+12Vdc), 6U (GND);
- to enable control, set:

Notice: when using 0-10 V probes, connect the probe power supply +(G) to terminal "G" on the board rather than terminal 3U.

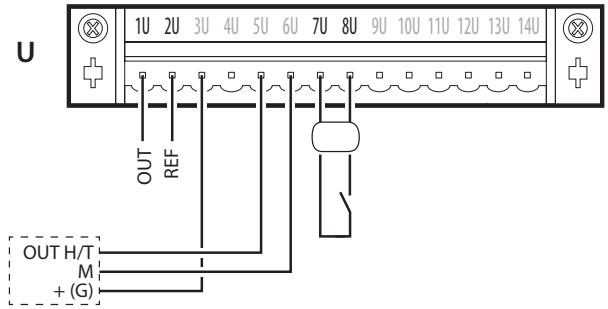

Fig. 9.k

Index	Parameter	Description
Ea01	Control type	Proportional to external signal with limit probe
Ea03	Proportional band	Set: Hysteresis (0-100%) - Minimum production (25%-00%) - Maximum production (25%-100%)
Ea06	Limit probe	Set: Humidity set point (0-100 %rH) - Differential (20 %rh)
Ec01	Type of main probe	Select from: 0 - 1V, 0 - 10V, 2 - 10V, 0 - 20mA, 4 - 20mA
Ec02	Limit probe type	Select from: 0 - 1V, 0 - 10V, 2 - 10V, 0 - 20mA, 4 - 20mA

Tab. 9.h

Notice: in industrial environments (IEC EN61000-6-2) the signal cables leaving the humidifier must not exceed 30 m (98') in length: steam production signal cable (terminals 1U, 2U), digital remote on/off input (terminals 7U, 8U) and shielded cable for RS485 communication.

9.3 Control with humidity probes

The main control board, connected to a room humidity probe, manages steam production based on the humidity measured. A second outlet humidity limit probe can also be connected: with this configuration, typical of air handling units, the controller continues managing steam production according to the humidity requirement, however production is limited according to the relative humidity measured in the outlet duct.

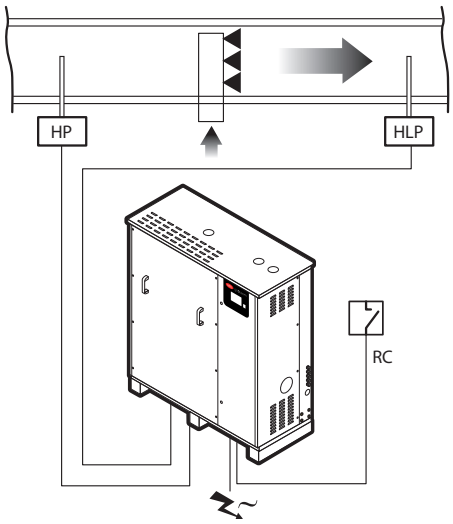

Fig. 9.l

Key:

HP	Room humidity control probe (intake/room humidity probe)
RC	Remote contact
HLP	Limit humidity probe (outlet humidity probe)

CONTROL WITH ONE HUMIDITY PROBE

- short-circuit terminals 7U and 8U (jumper) to enable production; alternatively connect terminals 7U – 8U to a remote contact (e.g.: switch, timer,...);
- connect the main active room probe to terminals 1U, 2U (GND) and 3U (+12Vdc);
- to enable control, set:

Notice: when using 0-10 V probes, connect the probe power supply +(G) to terminal "14" on the terminal block "T" inside the electrical panel, rather than terminal 3U.

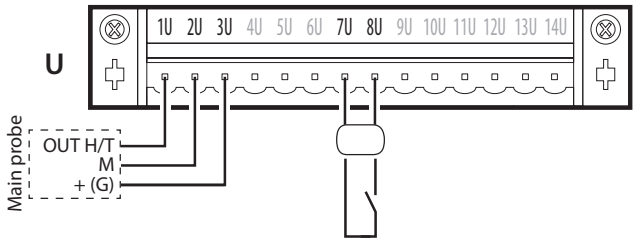

Fig. 9.m

Index	Parameter	Description
Ea01	Control type	one humidity probe
Ea05	Modulating control	Set: humidity set point (0-100 %rH) differential (2-20 %rh) Minimum production (25%-100%) - Maximum production (25%-100%)
Ec01	Type of main probe	Select from: 0 - 1V, 0 - 10V, 2 - 10V, 0 - 20mA, 4 - 20mA

Tab. 9.i

CONTROL WITH ONE HUMIDITY PROBE AND LIMIT PROBE

- short-circuit terminals 7U and 8U (jumper) to enable production; alternatively connect terminals 7U – 8U to a remote contact (e.g.: switch, timer,...);
- connect the main active room probe to terminals 1U, 2U (GND) and 3U (+12Vdc);
- connect the active limit probe to terminals 5U, 3U (+12Vdc), 6U (GND);
- to enable control, set:

Index	Parameter	Description
Ea01	Control type	Humidity with limit probe
Ea05	Modulating control	Set: Humidity set point (0-100 %rH) Differential (2-20 %rh) Minimum production (25%-100%) - Maximum production (25%-100%)
Ea06	Limit probe	Humidity set point (0-100 %rH) - Differential (20 %rh)
Ec01	Type of main probe	Select from: 0 - 1V, 0 - 10V, 2 - 10V, 0 - 20mA, 4 - 20mA
Ec02	Limit probe type	Select from: 0 - 1V, 0 - 10V, 2 - 10V, 0 - 20mA, 4 - 20mA

Tab. 9.j

Notice: when using 0-10 V probes, connect the probe power supply +(G) to terminal "14" on the terminal block "T" inside the electrical panel, rather than terminal 3U.

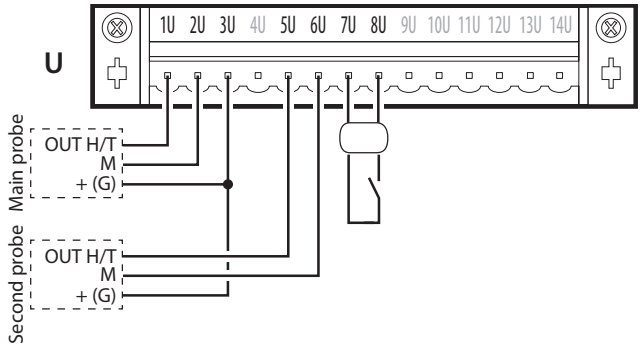

Fig. 9.n

The following probes can be connected:

probes for rooms	DPWC111000
for air ducts	DPDC110000, DPDC210000
for industrial applications	DPPC210000

Tab. 9.k

Notice: third-party active probes can also be connected to the controller.

CONTROL WITH TWO HUMIDITY PROBES

- short-circuit terminals 7U and 8U (jumper) to enable production; alternatively connect terminals 7U – 8U to a remote contact (e.g.: switch, timer,...);
- connect the main active room probe to terminals 1U, 2U (GND) and 3U (+12Vdc);
- connect the second active probe to terminals 5U, 3U (+12Vdc) and 6U (GND);
- to enable control, set:

Index	Parameter	Description
Ea01	Control type	Modulation with two humidity probes
Ea02	Control with two probes	Set the weight of the two probes (0-100%)
Ea05	Modulating control	Set: humidity set point (0-100 %rH) differential (2-20 %rh) Minimum production (25%-100%) - Maximum production (25%-100%)
Ec01	Type of main probe	Select from: 0 - 1V, 0 - 10V, 2 - 10V, 0 - 20mA, 4 - 20mA
Ec02	Second probe type	Select from: 0 - 1V, 0 - 10V, 2 - 10V, 0 - 20mA, 4 - 20mA

Tab. 9.l

The controller will calculate the weighted average between the two probes. The weight of the two probes can also be set.

Notice: when using 0-10 V probes, connect the probe power supply +(G) to terminal "14" on the terminal block "T" inside the electrical panel, rather than terminal 3U.

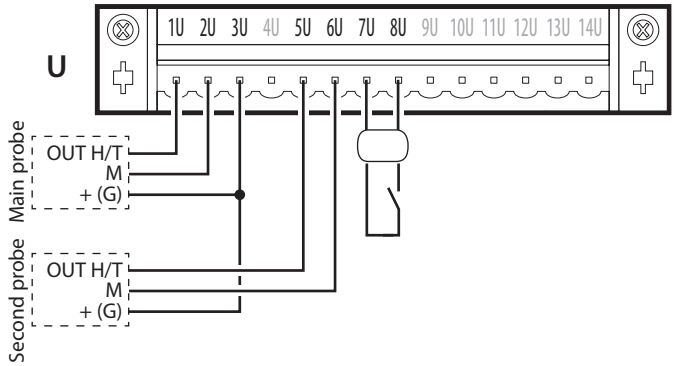

Fig. 9.o

The following probes can be connected:

probes for rooms	DPWC111000
for air ducts	DPDC110000, DPDC210000
for industrial applications	DPPC210000

Tab. 9.m

Notice: third-party active probes can also be connected to the controller.

9.4 Control with temperature probes

The controller also allows autonomous temperature control, and can be connected to a temperature probe TT. It performs complete control based on the temperature measured inside the controlled environment.

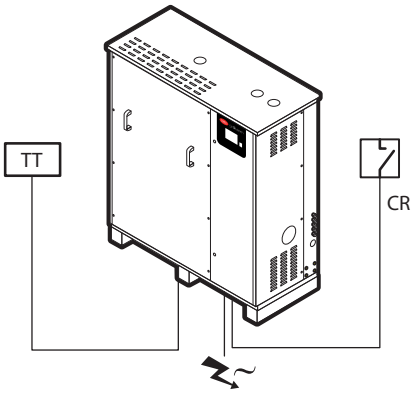

Key:

TT	Active temperature probe
RC	Remote contact

Fig. 9.p

CONTROL WITH ONE ACTIVE TEMPERATURE PROBE

- short-circuit terminals 7U and 8U (jumper) to enable production; alternatively connect terminals 7U – 8U to a remote contact (e.g.: switch, timer,...);
- connect the main active room probe to terminals 1U, 2U (GND) and 3U (+12Vdc);
- to enable control, set:

Index	Parameter	Description
Ea01	Control type	One temperature probe
Ea05	Modulating control	Set: temperature set point (0-100°C) (32-212°F) differential (2-20°C) (3.6-36°F) Minimum production (25%-100%) - Maximum production (25%-100%)
Ec01	Type of main probe	Select from: 0 - 1V, 0 - 10V, 2 - 10V, 0 - 20mA, 4 - 20mA

Tab. 9.n

Notice: when using 0-10 V probes, connect the probe power supply +(G) to terminal "14" on the terminal block "T" inside the electrical panel, rather than terminal 3U.

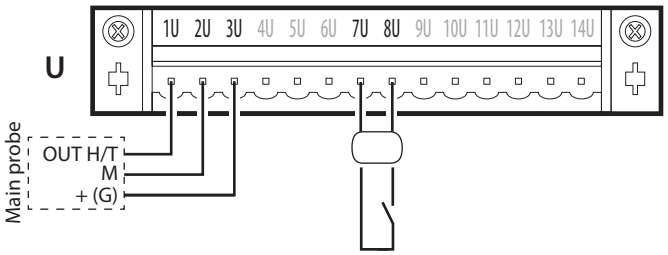

Fig. 9.q

CONTROL WITH ONE TEMPERATURE PROBE AND LIMIT PROBE

- short-circuit terminals 7U and 8U (jumper) to enable production; alternatively connect terminals 7U – 8U to a remote contact (e.g.: switch, timer,...);
- connect the main active room probe to terminals 1U, 2U (GND) and 3U (+12Vdc);
- connect the active limit probe to terminals 5U, 3U (+12Vdc), 6U (GND);
- to enable control, set:

Index	Parameter	Description
Ea01	Control type	Temperature with limit
Ea05	Modulating control	Set: temperature set point (0-100 °C) (32-212°F) differential (2-20°C) (3.6-36°F) Minimum production (25%-100%) - Maximum production (25%-100%)
Ea06	Limit probe	Set point (0-100 °C/°F) - Differential (0-100%)
Ec01	Type of main probe	Select from: 0 - 1V, 0 - 10V, 2 - 10V, 0 - 20mA, 4 - 20mA
Ec02	Limit probe type	Select from: 0 - 1V, 0 - 10V, 2 - 10V, 0 - 20mA, 4 - 20mA

Tab. 9.o

Notice: when using 0-10 V probes, connect the probe power supply +(G) to terminal "14" on the terminal block "T" inside the electrical panel, rather than terminal 3U.

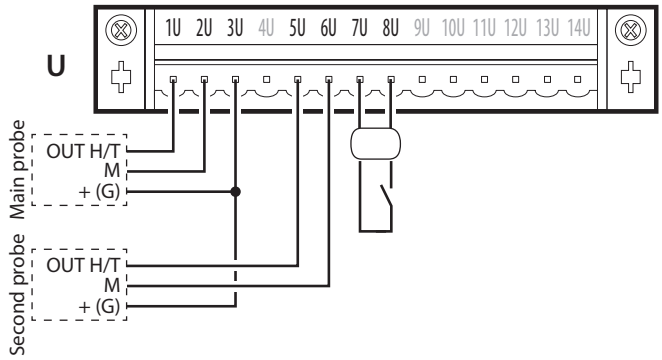

Fig. 9.r

The following probes can be connected:

probes for rooms	DPWC111000
for air ducts	DPDC110000, DPDC210000
for industrial applications	DPPC210000

Tab. 9.p

Notice: third-party active probes can also be connected to the controller.

CONTROL WITH TWO ACTIVE TEMPERATURE PROBES

- short-circuit terminals 7U and 8U (jumper) to enable production; alternatively connect terminals 7U – 8U to a remote contact (e.g.: switch, timer,...);
- connect the main active room probe to terminals 1U, 2U (GND) and 3U (+12Vdc);
- connect the active limit probe to terminals 5U, 3U (+12Vdc) and 6U (GND);
- to enable control, set:

Index	Parameter	Description
Ea01	Control type	Temperature (two probes)
Ea02	Control with two probes	Set the weight of the two probes (0-100%)
Ea05	Modulating control	Set: temperature set point (0-100 °C) (32-212°F) differential (2-20°C) (3.6-36°F) Minimum production (25%-100%) - Maximum production (25%-100%)
Ec01	Type of main probe	Select from: 0 - 1V, 0 - 10V, 2 - 10V, 0 - 20mA, 4 - 20mA
Ec02	Second probe type	Select from: 0 - 1V, 0 - 10V, 2 - 10V, 0 - 20mA, 4 - 20mA

Tab. 9.q

The controller will calculate the weighted average between the two probes. The weight of the two probes can also be set.

Notice: when using 0-10 V probes, connect the probe power supply +(G) to terminal "14" on the terminal block "T" inside the electrical panel, rather than terminal 3U.

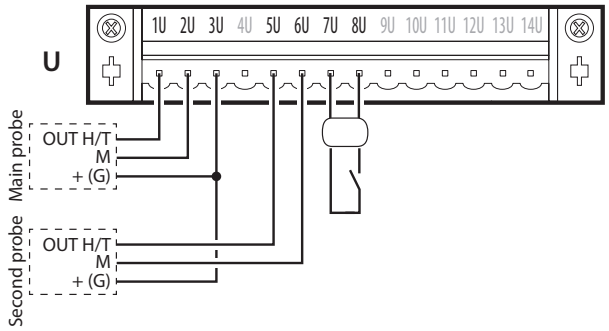

Fig. 9.s

The following probes can be connected:

probes for rooms	DPWC111000
for air ducts	DPDC110000, DPDC210000
for industrial applications	DPPC210000

Tab. 9.r

Notice: third-party active probes can also be connected to the controller.

CONTROL WITH ONE NTC TEMPERATURE PROBE (passive)

- short-circuit terminals 7U and 8U (jumper) to enable production; alternatively connect terminals 7U – 8U to a remote contact (e.g.: switch, timer,...);
- connect the main NTC room probe to terminals 1U and 2U;
- to enable control, set:

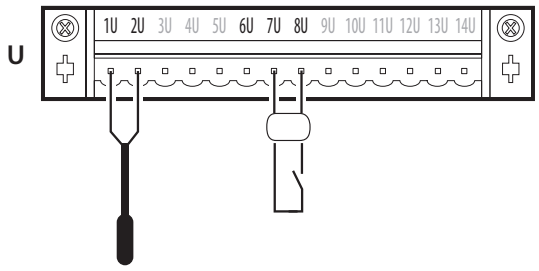

Fig. 9.t

Index	Parameter	Description
Ea01	Control type	one temperature probe
Ea05	Modulating control	Set: temperature set point (0-100 °C) (32-212°F) differential (2-20°C) (3.6-36°F) Minimum production (25-100%) - Maximum production (25-100%)
Ec01	Type of main probe	Set probe type: NTC

Tab. 9.s

CONTROL WITH TWO NTC TEMPERATURE PROBES (passive)

- short-circuit terminals 7U and 8U (jumper) to enable production; alternatively connect terminals 7U – 8U to a remote contact (e.g.: switch, timer,...);
- connect the first NTC probe to terminals 1U and 2U;
- connect the second NTC probe to terminals 5U and 6U;
- to enable control, set:

The controller will calculate the weighted average between the two probes. The weight of the two probes can also be set.

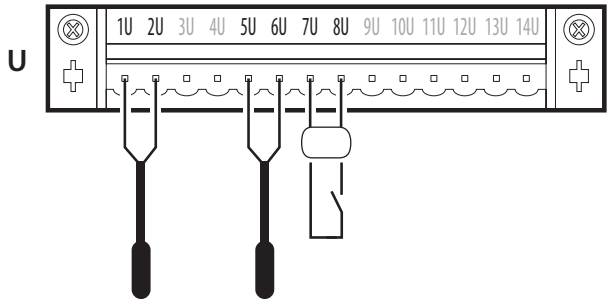

Fig. 9.u

Index	Parameter	Description
Ea01	Control type	Modulation with two temperature probes
Ea02	Control 2 probes	Set the weight of the two probes (0-100%)
Ea05	Modulating control	Set: temperature set point (0-100 °C) (32-212°F) differential (2-20°C) (3.6-36°F) Minimum production (25%-100%) - Maximum production (25%-100%)
Ec01	Type of main probe	Set probe type: NTC
Ec02	Second probe type	Set probe type: NTC

Tab. 9.t

9.5 Alarm contact

The humidifier controller is fitted with a relay contact for remote signalling of one or more faults or alarms. The connection to the alarm contact (250 Vac; max capacity: 2 A resistive - 2 A inductive) is activated via terminals 7O, 8O and 9O.

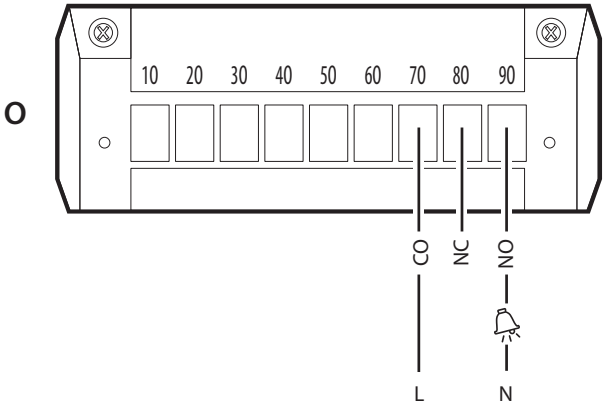

Fig. 9.v

Key:

7O	CO - Common
8O	NC - Normally closed
9O	NO - Normally open

Tab. 9.u

9.6 Production request analogue output

The humidifier controller is fitted with an analogue output (0-10 V signal) that reflects the production request. The production request output (0-10 V max 10 mA) is connected to terminals 11U, 12U.

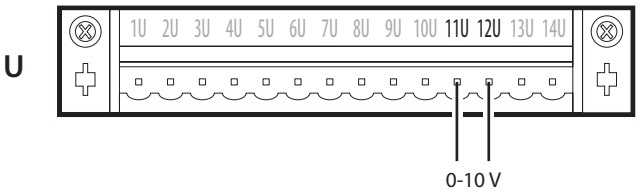

Fig. 9.w

Key:

11U	Production request analogue output
12U	GND

Tab. 9.v

IMPORTANT: to avoid unbalanced control, the earth of the probes or external controllers must be connected to the humidifier controller's earth.

9.7 Final checks

When installation is complete, verify that:

1. mains power to the humidifier corresponds to the voltage shown on the rating plate;
2. the fuses installed are suitable for the line and power voltage;
3. a mains disconnect switch has been installed so as to be able to disconnect power to the humidifier;
4. the humidifier has been correctly earthed;
5. the power cable is secured to the tear-resistant cable gland;
6. terminals 7U, 8U are jumpered or connected to an enabling contact;
7. if the humidifier is controlled by an external controller, the signal earth is electrically connected to the controller earth.

10. CHECKS BEFORE COMMISSIONING

10.1 Preliminary checks

Before starting the humidifier, check that:

- the water and electrical connections have been completed and the steam distribution system configured according to the instructions contained in this manual;
- the humidifier water shut-off valve is open;
- the power fuses are installed and intact;
- terminals 7U and 8U are jumpered or connected to the remote ON/OFF contact, and that the latter is closed;
- the probes or the external control device are correctly connected (and that the earth of these devices is electrically connected to the earth of the main control board);
- the steam hose is not choked;
- in the event of ducted humidification, operation of the humidifier is slaved to the operation of the air fan (replacing or in series with the remote ON/OFF contact);
- the condensate return pipe from the blower has been installed and is not obstructed;
- the drain pipe is connected correctly and unobstructed.

IMPORTANT

before starting, check that the humidifier is in perfect condition, that there are no water leaks and that the electrical parts are dry. Do not connect power if the appliance is damaged or even partially wet!

11. START-UP AND USER INTERFACE

11.1 Commissioning

After having connected power using the main disconnect switch (ON), switch the appliance on by moving the switch on the front panel (1 - Fig. 11.a) to "ON". The activation sequence will start, which includes an initial phase, an autotest phase and finally actual operation. Each step in the activation sequence is identified by a different display.

Indoor models

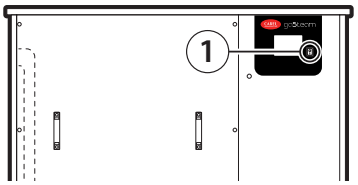

Outdoor models

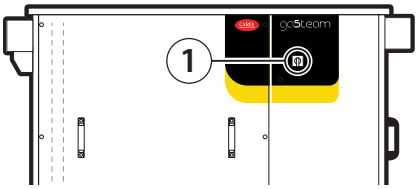

Fig. 11.a

11.2 Activation sequence

1. APPLICATION PROGRAM RUN THE FIRST TIME The humidifier logo (gaSteam) is displayed. When starting the first time, the menu language needs to be selected: English, Italiano, Deutsch, Français, Español.
   Select the desired language and confirm. This screen is displayed for 60 seconds.

2. WIZARD When starting the first time, a wizard is provided to quickly set the main humidifier parameters. The wizard comprises ten steps (some of which may not be displayed, if not necessary):
   1/10 model (only if the replacement controller is not configured): select and set the parameters relating to the model (size, voltage,…);
   2/10 water hardness: auto or user-defined. If selecting "auto", the controller automatically sets the hardness of the water, based on the conductivity reading;
   3/10 manual water hardness setting. The possible options are:
   • Demineralised, maintenance at 3000h (hours) • 0-10°f, maintenance at 3000h (hours)
   • 10-20°f, maintenance at 1500h (hours) • 20-30°f, maintenance at 1000h (hours)
   • 30-40°f, maintenance at 800h (hours);
   4/10 control type: external On/Off signal, proportional to external signal with limit probe, proportional to external signal, one humidity probe, one temperature probe, one humidity probe and limit probe, one temperature and limit probe, two temperature probes (average), two humidity probes (average);
   5/10 select the main room probe type:
   0-1V (active), 0-10V (active), 2-10V (active), 0-20 mA (active), 4-20 (active), NTC (passive);
   6/10 select the limit probe type: 0-1V (active), 0-10V (active), 2-10V (active), 0-20 mA (active), 4-20 (active), NTC (passive);
   7/10 set the limits for active probes.
   • Room min (%): set the minimum relative humidity limit rH% for the main probe;
   • Room max (%): set the maximum relative humidity limit rH% for the main probe;
   • Limit min (%): set the minimum relative humidity limit rH% for the limit probe;
   • Limit max (%): set the maximum relative humidity limit rH% for the limit probe;
   8/10 set the drain to dilute cycles: auto or user-defined. If selecting "auto", the controller automatically sets the number of evaporation cycles that must occur between two consecutive drain to dilute cycles. The selection is made by reading the inlet water conductivity using the conductivity meter, thus reducing water usage, reducing maintenance and extending boiler life;
   9/10 manual drain to dilute cycle setting. Enter the number of evaporation cycles before forcing a dilution cycle.
   10/10date and time setting. At the end of the guided procedure, a message prompts whether to show the wizard again when next starting? Yes/No

3. AUTOTEST PROCEDURE Indicated on the display by the humidifier status shown as "AUTOTEST". Whenever the humidifier is started (switch moved from OFF to ON), an autotest procedure is run by default to check operation of the level sensor and the appliance as a whole. The autotest procedure involves a water fill cycle to above the high level (green LED), followed by a drain cycle until below the minimum level (red LED). The procedure then refills the unit with water in order to restart production (if required).

   Notice: all the screens in the wizard (except for the language selection screen) remain on the display until the user enters the settings.

4. OPERATION The humidifier starts operating and the standard display is shown. If an alarm is active, the corresponding icon (bell) comes on red, see the chapter "Alarms" for the complete list and description.

   Notice: model selection and configuration (only for non-configured replacement controllers). If needing to replace the controller only (controller replacement part number UGKA0D0040), the first time the controller is powered on, the model will need to be set (capacity, power supply and version).

11.3 Different types of gas supply

IMPORTANT: the appliances are delivered calibrated and tested to operate on natural gas (methane).
The humidifier can be supplied by the following types of gas:
- Natural gas (G20-G25 methane - factory setting).
- Propane-Butane (LPG G30-G31).

IMPORTANT: models UG150, UG300, UG450 are not certified to operate on propane - butane (G30- G31).

A number of parameters on the electronic controller need to be set for correct operation, calibrating combustion by checking the values of CO2 (% vol) and CO (ppm) in the flue gas:

NATURAL GAS/LPG CALIBRATION

	no. of turns											
	UG45		UG90		UG150		UG180		UG300		UG450	
Gas	min	max	min	max	min	max	min	max	min	max	min	max
G20-G25	1450	4700	1700	5050	1900	6750	2000	5300	1900	6750	1900	6750
G30-G31	1650	4200	1850	4450	-	-	2000	5150	-	-	-	-

Tab. 11.a

11.3.1 Gas burner calibration

The burner is pre-calibrated in the testing phase by the manufacturer; nonetheless, combustion should be checked and adjusted if necessary.

11.3.2 Preparing to analyse combustion

If the flue gas exhaust pipe is positioned horizontally or vertically:
5. remove the cap from the inspection section of the humidifier flue gas exhaust pipe;
6. insert the flue gas analyser probe;
7. perform the flue gas analysis.

Once analysis has been completed, reposition the cap on the inspection section.

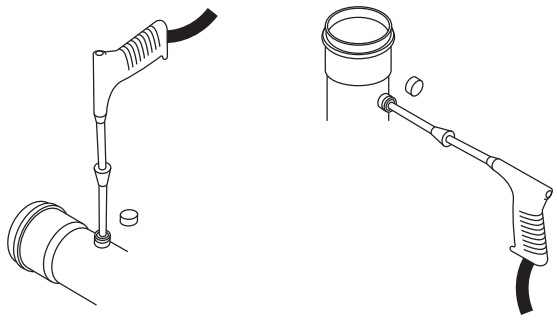

Fig. 11.b

11.3.3 Type of calibration

Two different types of burner calibration are available:
A. Guided;
B. Manual.
The guided procedure automatically provides the user, step by step, with all the information necessary to complete the calibration process. For the manual procedure, follow the instructions below.

11.3.4 Burner calibration at maximum output

Force the burner to operate at maximum output by setting the fan to the maximum speed and analysing the flue gas.

UG45/90/180

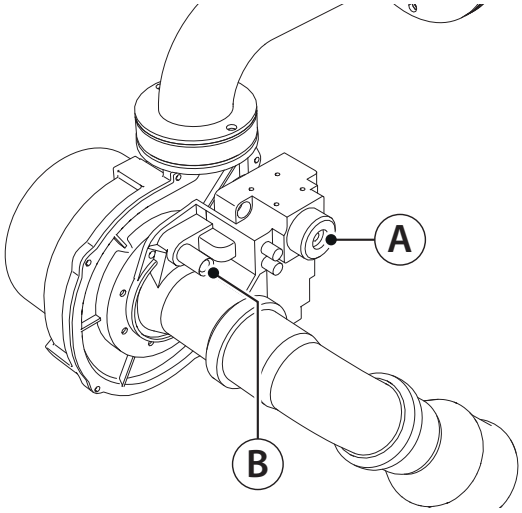

Fig. 11.c

UG150/300/450

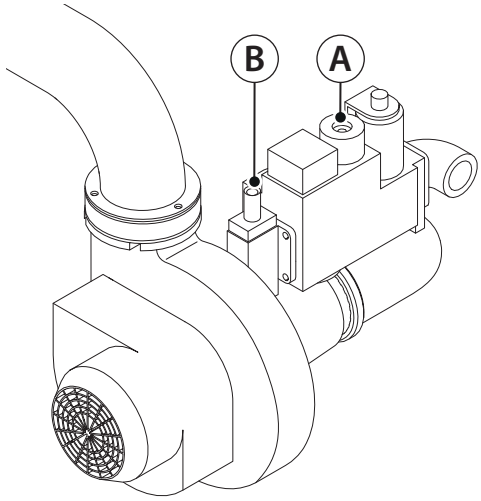

Fig. 11.d

Procedure:

After opening the front door and identifying the fan-valve assembly:

using a T25 Torx screwdriver:

- adjust the screw (B - Fig. 11.c) and check that the CO and CO2 values correspond to those in the emissions table;
- to increase the CO2 value, turn the hex key anticlockwise; to decrease it, turn the key clockwise.

using a 4 mm hex key:

- adjust the screw (B - Fig. 11.d) and check that the CO and CO2 values correspond to those in the emissions table;
- to increase the CO2 value, turn the screw clockwise; to decrease it, turn it anticlockwise .

UG45/90/180

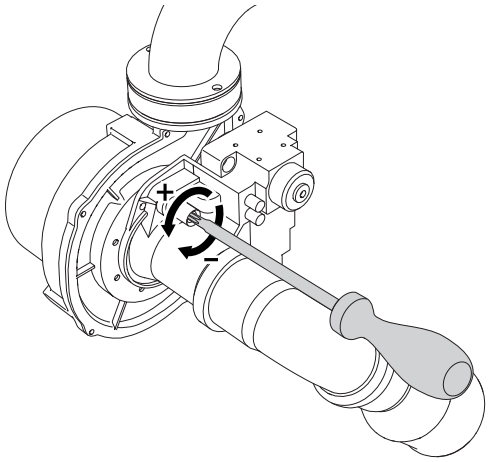

Fig. 11.e

UG150/300/450

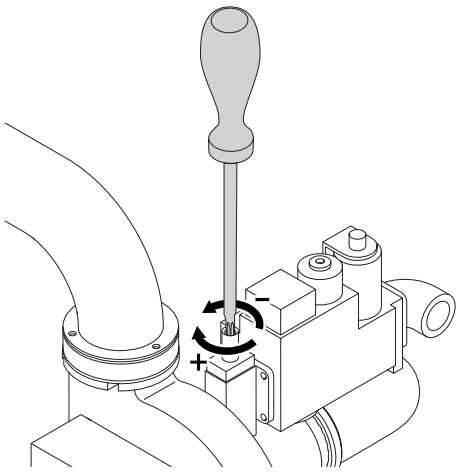

Fig. 11.f

EMISSIONS TABLE

Gas	CO2 (%)		CO (ppm)
	min	max	
G20-G25	8.3 ±0.3	9.3 ±0.3	< 80
G30-G31	9.9 ±0.3	10.5 ±0.3	

Tab. 11.b

11.3.5 Burner calibration at minimum output

Force the burner to operate at minimum output, by setting the fan to the minimum speed.

Procedure for both models:
Using a T40 Torx screwdriver:

- remove the cap to access the adjustment screw;

UG45/90/180

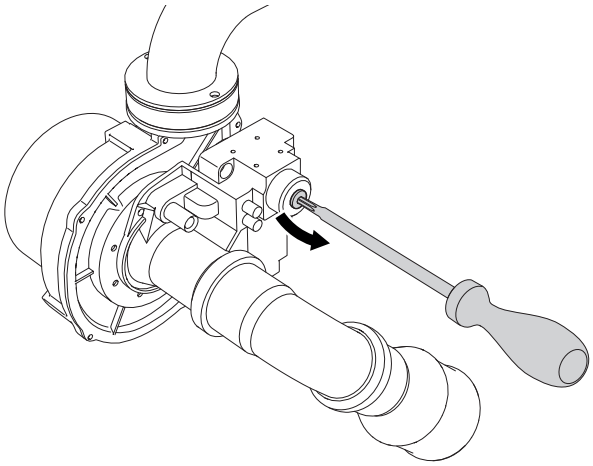

Fig. 11.g

UG150/300/450

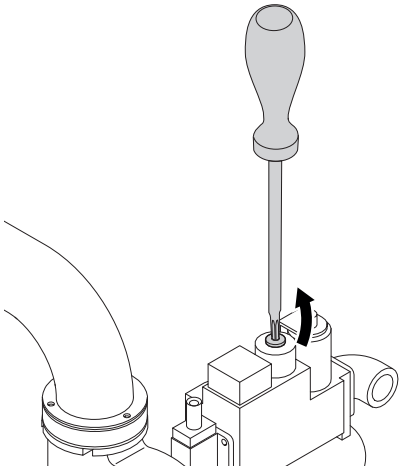

Fig. 11.h

- adjust the screw (A - Fig. 11.c) and check that the CO and CO2 values correspond to those in the emissions table;

UG45/90/180

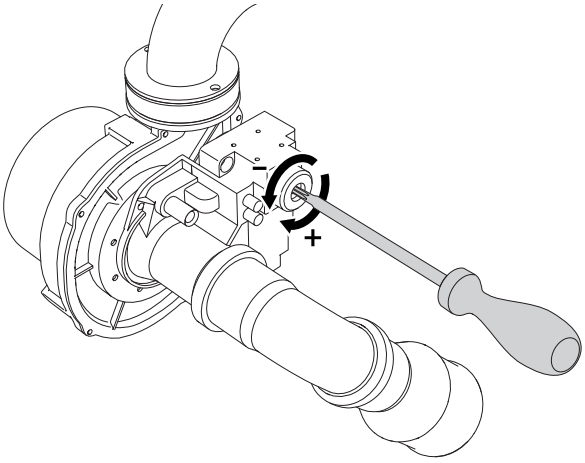

Fig. 11.i

UG150/300/450

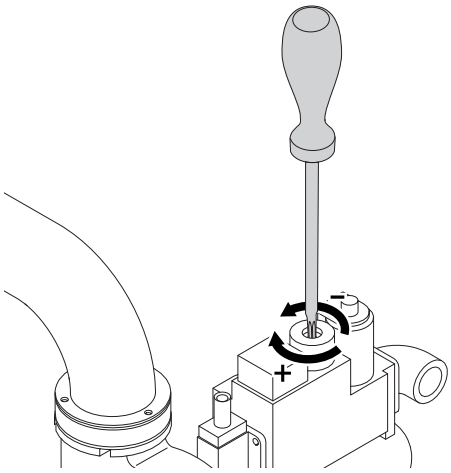

Fig. 11.j

- to increase the CO2 value, turn the screw clockwise; to decrease it, turn it anticlockwise .
- replace the cap on the regulator.

Notice: make small variations, as the adjustment screw is very sensitive.

IMPORTANT: once the calibration at MINIMUM output has been performed, check the MAXIMUM calibration again, as it may have been affected by the MINIMUM calibration; if necessary, repeat the operations described in Burner calibration at MAXIMUM output. Then reset the burner to automatic operation.

PROPANE/BUTANE/LPG CALIBRATION

The only units that can also run on propane, butane and LPG are: UG45, UG90 and UG180 (UG150, UG300 and UG450 only run on natural gas). Do not ignite the burner (factory calibrated for natural gas!) with propane or LPG until turning the screw (B - Fig. 11.c, 11.d) approximately 2.5-3 turns clockwise to adjust maximum gas flow. In fact, the heat power of propane is about three times that of natural gas (methane), therefore it is essential to first reduce the maximum gas flow before ignition. After having reduced the gas flow rate, ignite the burner and subsequently calibrate the gas flow rate by analysing the flue gas, as reported in the previous paragraphs.

11.4 Shutdown

To avoid stagnation, drain the water from the boiler using the manual procedure. Then move the switch to 0, "OFF".

11.5 Graphic terminal

The 4.3" touch graphic terminal has a graphic interface with coloured and animated icons. The contents of the display can be scrolled up and down simply and intuitively.

11.6 Touch display

"HOME" menu

The "HOME" menu comprises information on the probes, the set point and external request signal.

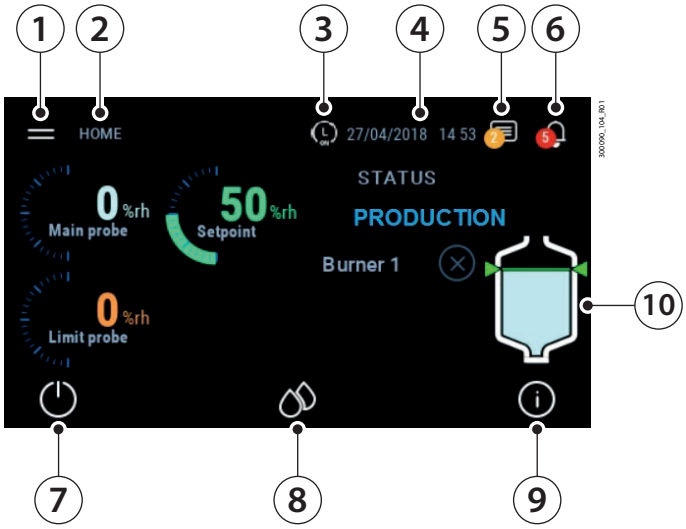

Fig. 11.k

Key:

Pos.	Function
1	System menu
2	Home
3	Scheduler settings
4	System date and time
5	Notification centre
6	Alarm list
7	ON/OFF
8	Set point setting
9	System information
10	Descriptive icon of humidifier status

Tab. 11.c

11.6.1 System menu

The System menu provides access to settings that are available without entering a password.

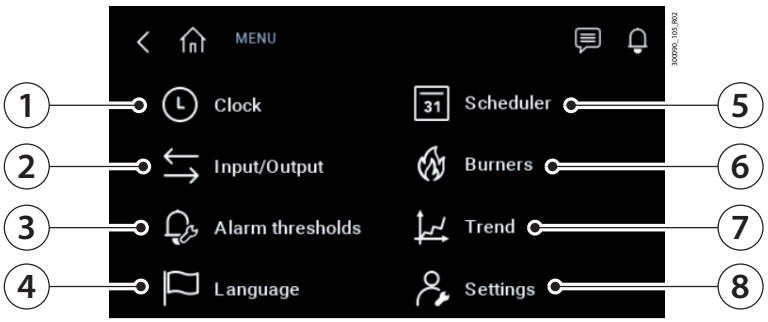

Fig. 11.l

Pos.	Menu	Description
1	Clock	Date and time setting
2	Input/Output	Display the analogue and digital inputs/outputs
3	Alarm thresholds	Set the alarm thresholds
4	Language	Set the menu language
5	Scheduler	Manage scheduling of working time bands
6	Functions	Special and manual functions
7	Graphs	Display historical and real-time operation of the humidifier
8	Settings	Access advanced humidifier configuration (Installer password 77). Menu: E. Settings. Change unit of measure (Imperial/International)

Tab. 11.d

11.6.2 Scheduler settings

The Scheduler menu is used to activate and set the time bands for switching on the humidifier. After enabling the scheduler (1 - Fig. 11.m), six on/off time bands can be set for each day. Use the copy button to copy the set time bands from one day to the next. For the specific functions of the scheduler see par. 12.1.4.

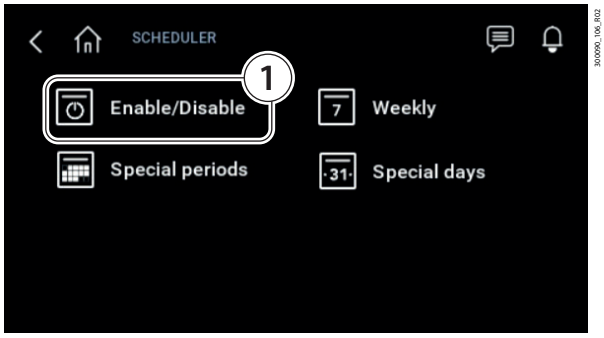

Fig. 11.m

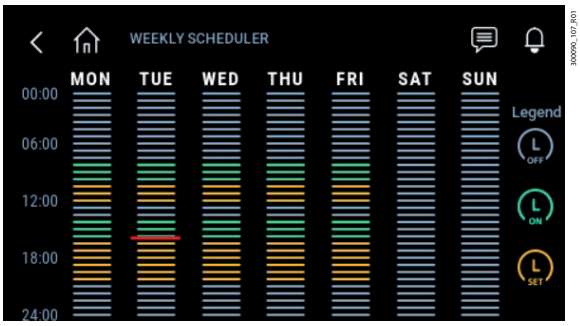

Fig. 11.n

11.6.3 Notification centre

The main messages regarding the activities performed by the humidifier can be quickly displayed in the notification centre. The main screen shows whether any notifications are present, by indicating the number of active notifications. The list of messages that can be viewed in the notification centre is shown below:

Message	Description	Type of notification
Maintenance required in xxx hours. Boiler lifetime hours: yyy hours	The unit will require routine maintenance	System
The unit has performed x drain cycles due to the presence of foam	The unit has performed a drain cycle due to foam detection	System
The maximum production of the Main/Secondary system is lower than the value set. Set: xxxx Current: yyyy	The maximum production of the Main/Secondary system is lower than the value set.	System
The unit has restarted automatically after a shutdown Was there a blackout?	The unit has restarted automatically after a shutdown. Was there a blackout?	User
Periodical drain cycle performed	The periodical drain was performed correctly	User
Factory reset	The factory parameters have been reset correctly	User

Tab. 11.e

The system notifications cannot be reset by the user and will be automatically cancelled, user notifications however can be deleted.

11.6.4 ON/OFF

The ON/OFF tab is used to switch the humidifier on (Fig. 11.p) and off (Fig. 11.o).

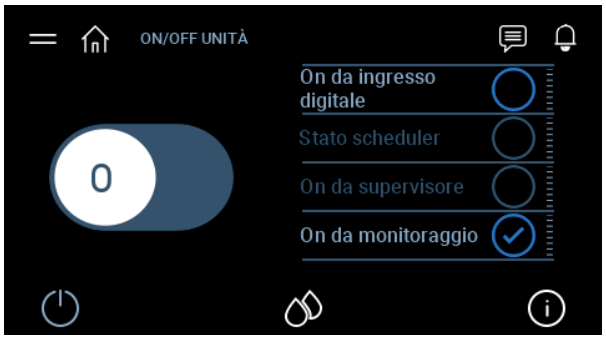

Fig. 11.o

Fig. 11.p

11.6.5 Set point setting

The Setpoint tab is used to set the set point (1 - Fig. 11.q), the proportional band (2 - Fig. 11.q) and the maximum production (3 - Fig. 11.q).

Fig. 11.q

11.6.6 System information

The System information tab shows information on the status and activity of the humidifier, as well as on the software and hardware.

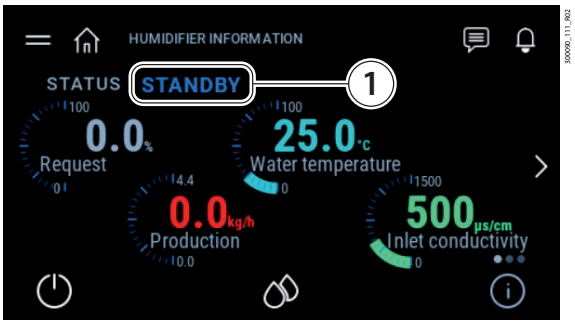

Fig. 11.r

The unit status is shown on the display, as indicated in the figure (1 - Fig. 11.r):

Unit status	Description
Standby	unit in standby and ready to operate
Production	the unit is producing steam
Alarm	there is at least one active alarm. Display the alarm by pressing the button
Off from BMS	steam production disabled by the supervisor
Off from scheduler	steam production disabled due to set time band
Off from DIN	production of steam stopped due to opening of the "remote ON/OFF" contact;
Off from keypad	the unit has been switched off from the keypad
Off from monitoring	steam production disabled by the monitoring service
Ready for backup	the unit is ready and awaiting to start operation if there is a fault on the main unit.
Manual mode	test mode for commissioning and to check functions (for example: activate drain pump, activate fill valve...)
Warning	warning notification
Preheating	the unit is preheating the water in the boiler
Preheat at start	at start-up, the unit heats the water to reach the production request
Autotest	the unit is running the autotest
Drain due to inactivity	water drain due to inactivity or periodically, the drain pump is operating

Tab. 11.f

11.6.7 Descriptive icon of humidifier status

Graphic display of unit status via animated icons. The status may be:

- Fill (fill valve active);
- Drain (drain pump active);
- Steam production;
- Minimum water level in the boiler (yellow and red LEDs on);
- Water level above the maximum in the boiler (green LED on);

11.7 Complete programming tree

Below is the complete tree of the settings menu. The screen index at the top right (Fig. 11.s) corresponds to the sequence in each menu in order to reach the specific page. There are two levels of access: Installer and Service.

To login to the settings menu, use the following passwords:
- service 0044;
- installer: 0077.

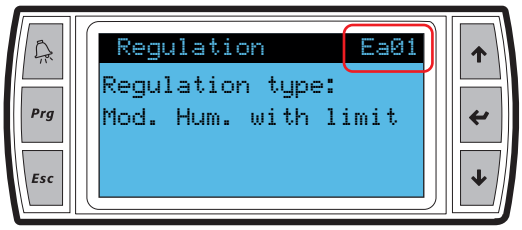

Fig. 11.s

Menu A. Clock

Index	Description	Level
A01	Set the time, date and time zone	Installer - Service

Menu B. Time bands (scheduler)

Index	Description	Level
B01	Enable time bands	Installer - Service
B02	(visible if time bands are enabled) Set the time bands: day, on time, off time	Installer - Service
B03	Set the special periods	Installer - Service
B04	Set the special days	Installer - Service

Menu C. Alarm thresholds

Index	Description	Level
C01	Set alarm thresholds Low humidity/temperature alarm threshold High humidity/temperature alarm threshold Limit humidity/temperature alarm threshold	Installer - Service

Menu D. Inputs/outputs

Menu	Index	Description	Level
Analogue inputs	D01	Read values of main probe, limit probe, boiler water temperature, feedwater conductivity	Installer - Service
Digital inputs	D02	Read status of remote On/Off, level sensor float position, foam sensor	Installer - Service
Analogue outputs	D03	Read current production	Installer - Service
Digital outputs	D04	Read status of unit On/Off, drain pump, fill valve	Installer - Service
In/Out - WPrb 1 (In/Out Wireless Probe 1)	D05	Read temperature and/or humidity values Read signal level and battery level on probe 1	Installer, Service
In/Out - WPrb 2 (In/Out Wireless Probe 2)	D06	Read temperature and/or humidity values Read signal level and battery level on probe 2	Installer, Service
In/Out - WPrb 3 (In/Out Wireless Probe 3)	D07	Read temperature and/or humidity values Read signal level and battery level on probe 3	Installer, Service
In/Out - WPrb 4 (In/Out Wireless Probe 4)	D08	Read temperature and/or humidity values Read signal level and battery level on probe 4	Installer, Service
Burner 1	D09	Read flue gas values, fan speed, flame presence, Klixon status and gas command	Installer, Service
Burner 2 (if present)	D10	Read flue gas values, fan speed, flame presence, Klixon status and gas command	Installer, Service
Burner 3 (if present)	D11	Read flue gas values, fan speed, flame presence, Klixon status and gas command	Installer, Service
Analogue inputs on secondary unit (if present)	D12	Read boiler water temperature, feedwater conductivity	Installer, Service
Digital inputs on secondary unit (if present)	D13	Read status of remote On/Off, level sensor float position, foam sensor	Installer, Service
Digital outputs on secondary unit (if present)	D14	Read status of unit On/Off, drain pump, fill valve	Installer, Service

Tab. 11.g

Menu E. Settings(password)

Menu		Index	Description	Level
a. Control	Control type	Ea01	Set the type of control	Installer
	Weights	Ea02	Set the weight of the two probes	Installer
	Control proportional to external signal	Ea03	Set the hysteresis, minimum production and max production	Installer
	External ON/OFF	Ea04	Set the maximum production with external ON/OFF control	Installer
	Mod. control (humidity probe)	Ea05	Set the set point, differential, min production, max production	Installer
	Integral function (humidity probe)	Ea05a	Set the integral time and the neutral zone	Installer
	Mod. control (temperature probe)	Ea05c	Set the set point, differential, min production, max production	Installer
	Integral function (temperature probe)	Ea05b	Set the integral time and the neutral zone	Installer
	Limit probe (humidity probe)	Ea06	Set the set point and differential	Installer
	Limit probe integral function (humidity probe)	Ea06a	Set the integral time and the limit probe	Installer
	Limit probe (temperature probe)	Ea06b	Set the set point and differential	Installer
	Limit probe integral function (temperature probe)	Ea06c	Set the integral time and the limit probe	Installer
	Boiler op. hours	Ea07	Display boiler operating hours Set maintenance pre-alert threshold	Service
	Reset boiler op. hours	Ea07a	Reset hour counter and display last reset date/time	Service
	Boiler operating hours (for the secondary unit, if present)	Ea07b	Display boiler operating hours Set maintenance pre-alert threshold	Service
	Reset boiler operating hours (for the secondary unit, if present)	Ea07c	Reset hour counter and display last reset date/time	Service
	Burner rotation	Ea10	Set the burner activation sequence	Installer
	Rotate the burners in series (if rotation in series is enabled)	Ea11	Rotation setting disabled/on ignition/in production and rotation hours	Installer
	Burner rotation delay	Ea12	Set the burner rotation ignition delay	Installer
b. Functions	En. Preheating	Eb02	Enable preheating Set the water temperature to maintain Set the offset	Installer
	Part fill cycles	Eb03	Enable part fill cycles Set part fill time	Installer
	Micro-fills (if micro-filling enabled)	Eb03a	Set the type of drain to dilute, drain duration and drain activation period	Installer
	Micro-fill scheduler (if micro-filling and daily scheduler enabled)	Eb03b	Set the drain to dilute daily activation time	Installer
	Part fills on secondary	Eb03d	Set part fill time on secondary unit	Installer
	Drain due to inactivity	Eb04	Enable drain due to inactivity Set the inactivity threshold	Installer
	Periodical drain	Eb05	Enable periodical drain cycles Set the threshold for the periodical drain cycles	Installer
	Signal M5, signal M6	Eb07	Enable the output relay Unit status (production) or maintenance pre-alert	Installer
	Signal M5, signal M6 (for the secondary unit, if present)	Eb07a	Enable the output relay Unit status (production) or maintenance pre-alert	Installer
	Blower unit	Eb08	Set on and off delay for blower unit	Installer
	Export logs	Eb09	Save the log of main variables to USB pen drive	Installer - Service
	Export alarms	Eb10	Save alarm log to USB pen drive	Installer - Service
	Frost protection	Eb11	Set the frost protection function	Installer
c. Configuration	Main probe	Ec01	Main probe configuration: 0-1V, 0-10V, 2-10V, 0-20mA, 4-20mA, NTC	Installer
	Limit probe/2nd probe	Ec02	Limit probe configuration: 0-1V, 0-10V, 2-10V, 0-20mA, 4-20mA, NTC	Installer
	Wireless probes	Ec03	Set the wireless probes (main/limit)	Installer
	Wireless probe 1	Ec04	Set the weight of probe 1 Set the communication times	Installer
	Wireless probe 2	Ec05	Set the weight of probe 2 Set the communication times	Installer
	Wireless probe 3	Ec06	Set the weight of probe 3 Set the communication times	Installer
	Wireless probe 4	Ec07	Set the weight of probe 4 Set the communication times	Installer

Menu		Index	Description	Level
	No. of evaporation cycles before drain	Ec11	Set the number of evaporation cycles between two drain cycles	Installer
	No. of evaporation cycles before draining (for the secondary unit, if present)	Ec11a	Set the number of evaporation cycles between two drain cycles	Installer
	Variation in fill and drain time	Ec12	Set the fill and drain times in relation to factory default	Installer
	Variation in fill and drain time (secondary unit, if present)	Ec12a	Set the fill and drain times in relation to factory default	Installer
	Water hardness	Ec13	Hardness value	Installer
	Retry time with no water	Ec14	Set time to check for no water	Installer
	Retry time with no water (secondary unit, if present)	Ec14a	Set time to check for no water	Installer
	High conductivity	Ec15	Enable the high conductivity alarm Set the alarm delay	Installer
	High conductivity	Ec16	Set conductivity thresholds: warning, alarm and hysteresis	Installer
	Remote ON input logic	Ec22	Operating logic for remote ON/OFF	Installer
	Set burner 1	Ec23	Set speed Pre-purge, minimum and maximum speed for production (Burner 1)	Installer
	Set burner 2	Ec24	production (burner 2)	Installer
	Set burner 3	Ec25	Set speed Pre-purge, minimum and maximum speed for production (Burner 3)	Installer
	Foam level	Ec27	Set foam sensitivity level	Installer
	Burner calibration	Ec28	Start the procedure to calibrate the burners.	Installer
	Foam level, secondary unit	Ec29	Set secondary unit foam sensitivity level	Installer
	Main/Secondary	Ed01	Initial Main/Secondary system configuration Press "PRG" to configure the Main/Secondary network	Installer
d. Main/ Secondary e. Backup	Unit 1 Unit 2 . . . Unit 20	Ed02	Add unit to the Main/Secondary system	Installer
	Max system production	Ed03	Set maximum production of the Main/Secondary system.	Installer
	Main/Secondary. Unit rotation.		Set the unit rotation logic	
	Advanced preheating. Rotation time.	Ed04	Enable the advanced pre-heating function for Main/Secondary systems Set the rotation time between units	Installer
	Offline timeout.	Ed05	Set the offline time for units in the Main/Secondary system	Installer
	Disconnect unit from Main/Secondary system	Ed06	Disable/disconnect the current unit from the Main/Secondary system	Installer
	Main/Secondary Production	Ed07	Display request (%) and production (kg/h / lbs/h) of the Main/Secondary system Press "PRG" to configure the Main/Secondary network	Installer
	Display Main/Secondary system	Ed08	Unit status with corresponding % of production Press "PRG" to configure the Main/Secondary network	Installer
	Display info on individual unit. Unit 1 Unit 2 to Unit 20	Ed09	Display unit operating hours, current production and any alarms To scroll between the units use the UP and DOWN arrows	Installer
	Unit switched off for maintenance.	Ed10	Unit switched off to carry out maintenance	Installer
	Enable backup	Ee01	Enable automatic unit backup in the event of shutdown, using a second independent unit	Installer
	Priority when starting	Ee02	Define the priority of the units when in backup mode	Installer
f. Manual mode	Manual mode	Ef01	Enable manual mode: Disabled, manual management of outputs and manual request	
	Manual management of the outputs	Ef02	Test the outputs: fill valve, drain pump, blower…	Service, Installer
	Manual management of the outputs (secondary unit, if present)	Ef02a	Test the outputs: fill valve, drain pump, blower…	Service, Installer
	Management of the manual request	Ef03	Manually set the production request	Service, Installer
	Manual management of burner 1	Ef04	Enable burner manual mode, manual speed setting, burner speed reading	Service Installer
	Manual management of burner 2 (if present)	Ef05	Enable burner manual mode, manual speed setting, burner speed reading	Service Installer
	Manual management of burner 3 (if present)	Ef06	Enable burner manual mode, manual speed setting, burner speed reading	Service Installer

Menu		Index	Description	Level
g. Initialisation	Wizard	Eg01	Start the wizard for initial unit configuration Set whether to display the wizard when next restarting	Service, Installer
	Language	Eg02	Set the language	Service, Installer
	Unit of measure and language when starting	Eg03	Set unit of measure (International or Imperial). Select the language when starting	Installer
	Change password	Eg04	Change the password (Service, Installer).	Service, Installer
	Inst. default	Eg06	Unit factory reset. Caution, changing the model will clear all the settings on the controller and restore the factory default values	Service, Installer
	Software update	Eg07	Update the unit software from USB pen drive	Service, Installer
	Export parameters	Eg08	Export the unit configuration parameters to a USB pen drive	Service, Installer
	Import parameters	Eg09	Import configuration parameters from USB pen drive to the unit	Service, Installer
h. Supervisor	Unit BMS port address	Eh01	Set the unit's address for the supervisor Enable supervisor type and protocol	Installer
	BMS port communication settings	Eh02	Set the supervisor communication parameters via BMS: baud rate, stop bits and parity bits	Installer
	BACnet MS/TP configuration	Eh03	Set address, maximum number of main units and maximum number of frames	Installer
	Device instance	Eh04	Configure device inst. for BACnet protocol	Installer
	Ethernet network settings	Eh05	Set DHCP, IP address, mask, gateway, DNS for the Ethernet network IMPORTANT: these values must be provided by the local network administrator	Installer
	Supervisor settings on Ethernet port	Eh06	Select the protocol on the Ethernet port: ModBus or BACnet	Installer
	Control from supervisor	Eh07	Select the port that the supervisor is connected to Enable unit On/Off and control from supervisor	Installer
	Supervisor offline alarm	Eh08	Enable supervisor offline alarm and set alarm activation delay	Installer
	Monitoring service	Eh09	Read unit paused by monitoring service status, enable unit paused bypass, set automatic disabling of paused bypass	Installer
i. Logout	Logout	Ei01	Information on the type of login performed Possibility to log out	Service, Installer

Tab. 11.h

11.8 Operation and control

Before describing the electrical connections to the terminals in detail, below is an introduction to the humidifier control principles.

11.8.1 Operating principle of a gas-fired humidifier

In a gas-fired humidifier, the production of steam is obtained inside a boiler containing water that is heated to and then held at boiling temperature. The heat required to boil the water is provided by a heat exchanger, heated by a modulating premixed gas burner. Burner operation is completely automatic and there is no pilot flame. All stages of burner operation are managed by an electronic board that, through ionisation control, constantly checks the flame. The continuously-delivered heat output reflects heat demand, across a wide modulation ratio (1: 4). The variable-speed fan (driven by the control board), combined with a proportional gas valve, ensures modulation of heat output (the gas flow-rate is proportional to the air needed for combustion). The water that evaporates over time is automatically replenished from the mains supply. When fully operational, the required level of production is achieved automatically by adjusting the heat output of the burner. The salts introduced by automatically refilling the water partly deposit in the form of scale inside the boiler, causing a progressive decline in performance, and partly remain dissolved in the water. To avoid excessive accumulation of salts, a certain amount of water is periodically and automatically drained, and then replaced with fresh water.

Control principles

The humidifier can be configured to ensure the desired humidity or temperature value. It can be controlled in the following ways:

11.8.2 ON/OFF control

Operation is all or nothing, and is activated by an external contact; the maximum percentage of unit production can be set.

11.8.3 Proportional to an external signal (modulating control)

Steam production is proportional to the value of an external signal Y (selectable by programming one of the following standards: 0-1Vdc; 0-10Vdc; 2-10Vdc; 0-20mA; 4-20mA). The maximum production Pmax corresponds to the maximum value of the external signal Y and will be the humidifier's rated output. The activation hysteresis hy is settable by the user and refers to the external signal Y.

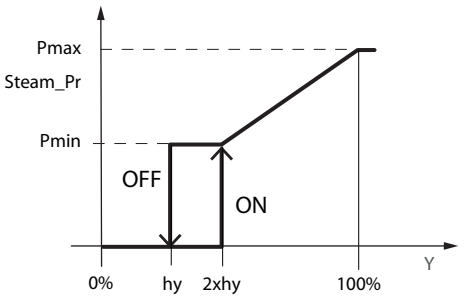

Y= 0 ÷ 1Vdc
0 ÷ 10Vdc
2 ÷ 10Vdc
0 ÷ 20mA
4 ÷ 20mA

Key:

Steam_pr	Steam production
Y	External signal
Pmax	Max production
hy	Activation hysteresis
Pmin	Min production

Fig. 11.t

Notice: the above graph applies if the preheating function is disabled.

11.8.4 Autonomous control with humidity probes

The production of steam is related to the % rH reading made by the relative humidity probe, and increases as the value read deviates from the set point St. The maximum production Pmax is delivered when the relative humidity read by the probe is equal to the value of BP (proportional band) from the set point. The activation hysteresis hy is settable by the user.

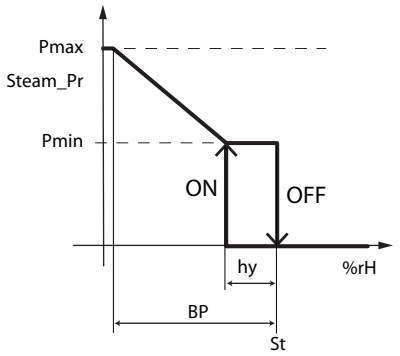

Key:

Steam_pr	Steam production
%rH	Relative humidity measured
Pmax	Max production
hy	Activation hysteresis
Pmin	Min production

Fig. 11.u

To verify that the relative humidity measured by the probe is within certain predefined values, two alarm thresholds can be set in autonomous control:

- high relative humidity;
- low relative humidity.

When these thresholds are exceeded, an alarm is activated and the corresponding relay contact is closed.

11.8.5 Autonomous control with relative humidity probe and outlet limit probe

In this case too, the controller modulates steam production based on the % rH measured by the main relative humidity probe, while limiting production if the humidity measured by a second limit probe, located in the air duct downstream of the steam distributor, approaches the maximum desired value. Consequently, to prevent the relative humidity of the outlet air from exceeding a value that is considered excessive, autonomous control with a limit probe can be set with a high relative humidity alarm threshold. When this threshold is exceeded, an alarm is activated and the corresponding relay contact is closed. The limit probe allows steam production to be modulated depending on the specific set limit differential.

11.8.6 Application for steam baths

In applications for steam baths, in which the control probe measures temperature rather than humidity, the same rules apply as for autonomous control with probe. By setting control based on temperature, the humidifier will continue to produce steam until reaching the desired set point temperature inside the steam bath, and consequently the desired saturation of the air (fog effect). Recommended transducer: ASET030000 or ASET030001 or UEKNTC0* NTC probes.

12. USER MENU AND UNIT CONFIGURATION

The following paragraphs describe the gaSteam programming menus. The screen index at the top right (Fig. 11.s) corresponds to the sequence in each menu in order to reach the specific page.

12.1 Main menu

12.1.1 Clock menu

The Clock menu is used to set the time (4 - Fig.12a), the date (3 - Fig.12a), the date display format (1 - Fig.12a) and the time zone (2 - Fig.12a). Setting the time zone will automatically update standard/daylight saving time. To access this tab, enter the system menu and then click the clock icon.

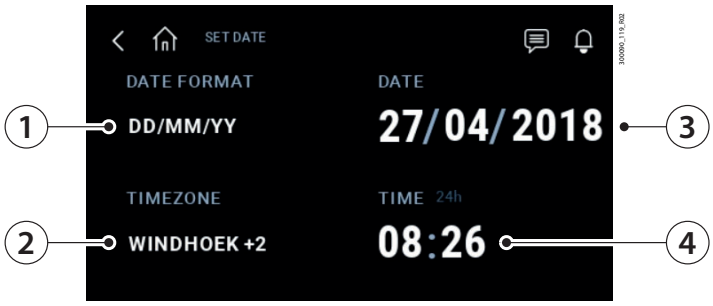

Fig. 12.a

12.1.2 Inputs/outputs

The Inputs/outputs menu is used to read the status of the inputs and outputs and check humidifier operation and status. From the system menu, enter the "Input/Output" menu (2 - Fig. 11.l):

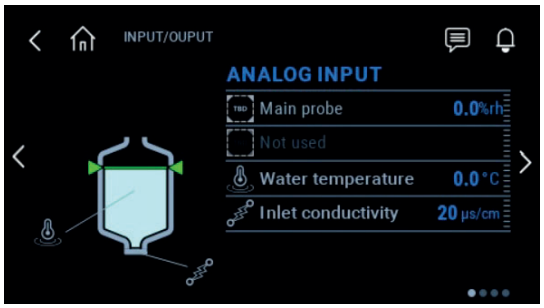

Fig. 12.b

Parameter	Description
Analogue inputs	Values read by main probe, limit probe, boiler water temperature, feedwater conductivity.
Digital inputs	Read status of remote On/Off, level sensor float position, foam sensor.
Analogue outputs	Read current production
Digital outputs	Read status of unit On/Off, contactor, drain pump, fill valve, SSR/fan
In/Out - WPrb 1 (In/Out Wireless Probe 1)	Read temperature and/or humidity values Read value of level signal and battery level on probe 1
In/Out - WPrb 2 (In/Out Wireless Probe 2)	Read temperature and/or humidity values Read value of level signal and battery level on probe 2
In/Out - WPrb 3 (In/Out Wireless Probe 3)	Read temperature and/or humidity values Read value of level signal and battery level on probe 3
In/Out - WPrb 4 (In/Out Wireless Probe 4)	Read temperature and/or humidity values Read value of level signal and battery level on probe 4

Tab. 12.a

12.1.3 Alarm thresholds

To check that the relative humidity measured by the probe transducer is within certain predefined values, two alarm thresholds can be configured:

- high relative humidity alarm threshold (2 - Fig. 12.c), for both the main probe and limit probe;
- low relative humidity alarm threshold (1 - Fig. 12.c), for the main probe.

On exceeding these thresholds, an alarm is activated and the corresponding relay contact on the main control board is closed. Temperature thresholds can also be set.

To access this tab, enter the system menu and then click the "alarm thresholds" icon (3 - Fig. 11.l):

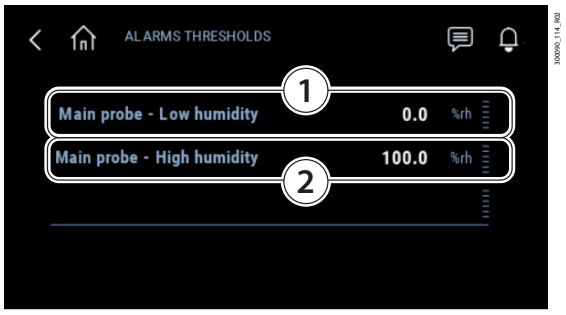

Fig. 12.c

Parameter	Description
Alarm thresholds	Set alarm thresholds Low humidity/temperature alarm threshold High humidity/temperature alarm threshold Limit humidity/temperature alarm threshold
	Default: low humidity/temperature 0% rH / 0°C(32°F); high humidity/temperature 100% rH / 100 °C(°F); high limit humidity/temperature 100% rH / 100 °C(°F);
	Possible settings: 0 to 100

Tab. 12.b

12.1.4 Scheduler menu

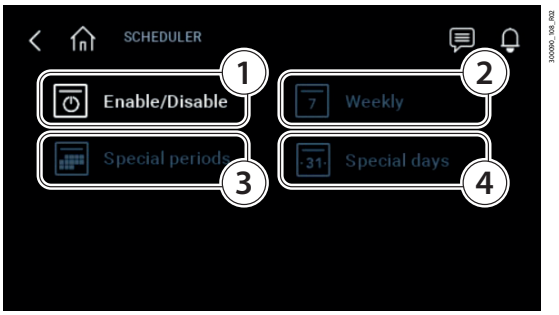

Fig. 12.d

Parameter	Description
Scheduler	Enable time bands
	Default: time bands disabled

Tab. 12.c

After having enabled the scheduler (1 - Fig. 12.d) in the corresponding menu, the humidifier operating intervals can be set for one day (24h) and for the whole week (2 - Fig. 12.d) . A time band can be set with production disabled (OFF 1 - Fig. 12.w)), enabled (ON 2 - Fig. 12.e)), or enabled with a specific set point (ON+SET, 3 - Fig. 12.e). Setting the ON time band, the unit uses the main set point configured. If setting ON+SET, the specific set point for the time band can be configured.

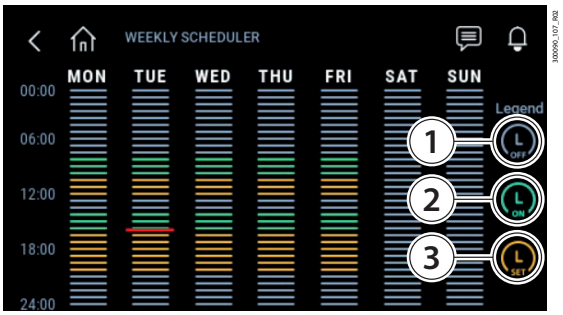

Fig. 12.e

Symbol	Unit of measure
%	%rH
°C	Degrees Celsius
°F	Degrees Fahrenheit

Tab. 12.d

Notice: if control is by external signal, the humidifier can only be switched ON (2 - Fig. 12.e) or OFF (1 - Fig. 12.e).

The "Special period" function (3 - Fig. 12.d) can be used to set operation (or switch off) for a specific period of time (from day x to day y).

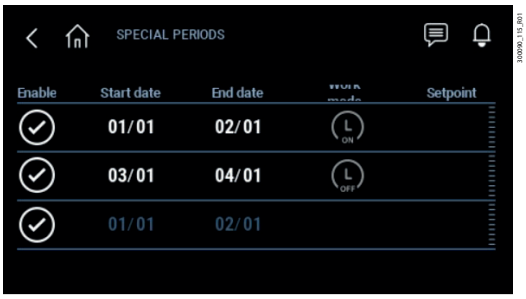

Fig. 12.f

The "Special day" function (4 - Fig. 12.d) can be used to set operation (or switch off) on a specific day.

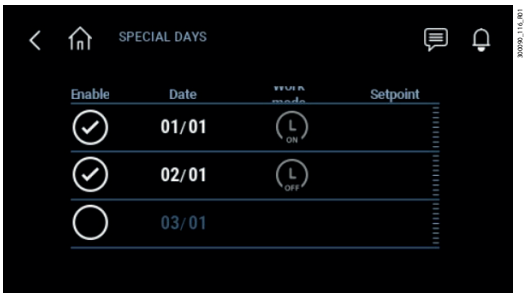

Fig. 12.g

12.2 Menu: E. Settings

The Settings menu (Fig. 12.h) can be used to:
- modify the humidifier settings and control (1 - Fig. 12.h);
- set the reference units of measurement (2 - Fig. 12.h);
- manually drain the water in the boiler (3 - Fig. 12.h).

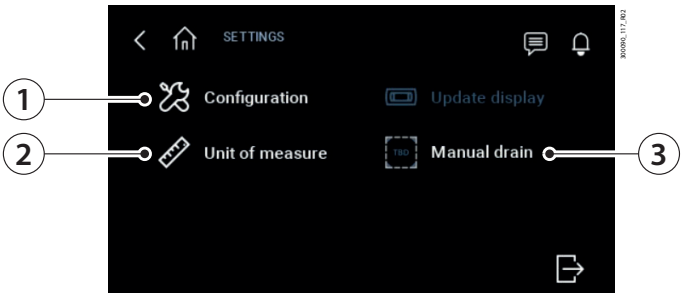

Fig. 12.h

To access this menu, from the system menu (Fig. 11.l), click the Settings menu (8 - Fig. 11.l) and log in with the password, based on the user, as specified below:
- service 0044;
- installer: 0077.

Then click the Configuration icon (1 - Fig. 12.h) to access the subsequent menus (Fig. 12.i):
- a. Control (par. 12.3);
- b. Functions (par. 12.4);
- c. Configuration (par. 12.5);
- d. Main/Secondary (par. 12.6);
- e. Backup (par. 12.7);
- f. Manual mode (par. 12.8);
- g. Initialisation (par. 12.9);
- h. Supervisor (par. 12.10);
- i. Logout (par. 12.11)

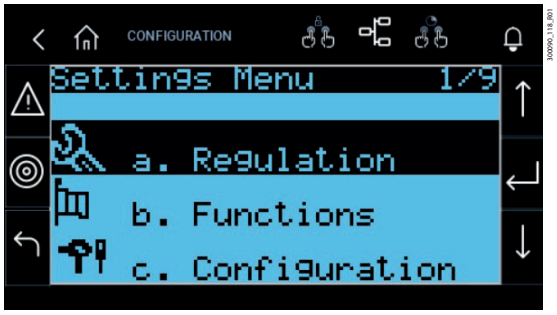

Fig. 12.i

12.3 Menu E. Settings - a. Control

12.3.1 Control type (Installer menu)

Index	Parameter	Description
Ea01	Control type	Set the type of control
		Default: humidity (one probe)
		Possible settings: proportional to external signal, proportional to external signal with limit probe, On/Off signal, humidity (one probe), temperature (one probe), humidity with limit, temperature with limit, humidity (two probes), temperature (two probes)

Tab. 12.e

The possible settings are:
- proportional to external signal: proportional control with signal from an external controller;
- proportional to external signal with limit probe: proportional control with signal from an external controller plus limit probe;
- On/Off signal: humidity control with humidistat;
- humidity (one probe): humidity control with main probe;
- temperature (one probe): temperature control with main probe;
- temperature with limit: temperature control with main probe and limit probe;
- temperature with limit: temperature control with main probe and limit probe;
- humidity (two probes): humidity control with two probes, the controller calculates the weighted average of the two values read;
- temperature (two probes): temperature control with two probes, the controller calculates the weighted average of the two values read.

For "humidity (one probe)" or "temperature (one probe)" control, one single main probe can be connected and configured, either wired or wireless. For "humidity with limit" or "temperature with limit" control, a wired probe can be connected as the main probe and a wired probe as the limit.

If using wireless probes (maximum of four), two groups of probes can be defined: the group of main probes and the group of limit probes. In this case, the average will be calculated between the main probes, depending on the defined weight, and the limit probes will also have their own average, again depending on the defined weight.
For "humidity (two probes)" or "temperature (two probes)" control, only a group of main probes can be defined.

Wired probes can be connected to the main probe input (1U) and the limit probe input (5U), which will be used as a second probe, with the average calculated. If using wireless probes (maximum of four), only a group of main probes can be defined, with the average calculated, depending on the defined weight.

For the connections of the signals and/or probes, see "Electrical connections".

12.3.2 Weighted average of the probes (Installer menu)

If using two temperature probes or two humidity probes, the humidifier controller will calculate the weighted average of the probe readings. In this way, two probes can be used, for example humidity probes, at opposite ends of the room, calculating the average.

Index	Parameter	Description
Ea02	Weights	Set the weight of the probes
		Default: 100
		Possible settings: 0 to 100
		Step: 1

Tab. 12.f

The weight of each probe is expressed with a value from 0 to 100. The weighted average is calculated as follows:
Weighted average = ((S1×p1)+(S2×p2)) / (p1+p2)

where "Si" is the probe reading, and "pi" the relative weight.
To calculate the arithmetic average, equal weights should be set (for example: p1 = p2 = 100). If using wireless probes, the weights of each device can also be defined; in this case a maximum of four wireless probes can be connected, and consequently the formula shown previously for calculating the weighted average is extended to four devices.

12.3.3 Proportional control configuration

If using control proportional to external signal or control proportional to external signal with limit probe, the hysteresis, minimum and maximum production need to be set.

Index	Parameter	Description
Ea03	Control proportional to external signal	Set the hysteresis, min production and max production
		Default: Hysteresis = 5% Minimum production = 25% Maximum production = 100%
		Possible settings: Hysteresis = 0.5-100% Minimum production = 0-10% Maximum production = 0-100%

Tab. 12.g

12.3.4 Control from external ON/OFF signal configuration

If using control with On/Off signal, the maximum production needs to be set.

Index	Parameter	Description
Ea04	External ON/OFF	Set the maximum production with external ON/OFF control
		Default: 100%
		Possible settings: 0 to 100%

Tab. 12.h

12.3.5 Modulation configuration (Installer menu)

If using modulating control, the related parameters need to be set:

Index	Parameter	Description
Ea05	Mod. control	Set the set point, differential, min production, max production
		Default:
		Set point = 50%rH (42°C) (107.6°F)
		Differential = 5%rH (5°C) (9°F) Minimum production = 25% Maximum production = 100%
		Possible settings: 0 to 100

Tab. 12.i

12.3.6 Integral function in probe control

If using a probe that is connected directly to the humidifier (control: humidity probe), the Integral (I) control function can be selected. This means the humidity level over time can be considered, bringing the value to the set point even when the proportional action (P) alone is null. To activate the Integral function, set humidity control (single probe) on screen [Ea01]; also adjust the proportional band on screen [Ea05] (for example, by setting it to a value of 50%). The proportional band has to be at least 10% or higher, so that screen Ea05a will be visible. On screen [Ea05a], two parameters can be set, "integral time" and "neutral zone".

Index	Parameter	Description
Ea05a	In. Time	Integral time setting
		Default: 120 s
		Minimum: 0 sec (integral function disabled)
		Maximum: 300 s
	Dead band	Neutral zone integral setting, inside which gain remains constant
		Default: 2.5%
		Minimum: 0%
		Maximum: 20%

Tab. 12.j

12.3.7 Limit probe configuration (Installer menu)

A second probe can be connected as a limit probe at the outlet. This probe has the purpose of preventing the relative humidity downstream of the steam distributor from exceeding a set value, configured by the user. As this probe has a modulating action, the differential can also be set. The limit probe, within its range of activation, has priority over the main probe (as the limit probe set point is higher than the main probe set point).

Index	Parameter	Description
Ea06	Limit probe	Limit probe set point and differential
		Default:
		Set point = 100%rH Differential = 5%
		Possible settings: 0 to 100

Tab. 12.k

12.3.8 Boiler operating hours (Service menu)

The "Boiler op. hours" screen displays the effective number of boiler operating hours.

Index	Parameter	Description
Ea07	Boiler op. hours	Display boiler operating hours, reset hour counter and set maintenance pre-alert threshold
		Default: Pre-alert = 240 hours
		Possible settings: 0 to 999

Tab. 12.l

If the boiler needs to be replaced, the hour counter must be reset using the "Reset" parameter; the hour counter will then start again from zero. The "Pre-alert" item sets the maintenance pre-alert, which is activated "x" hours before the maintenance alarm, and where "x" is the value set for the "Pre-alert" parameter. This allows time to plan the maintenance operation. The "maintenance alarm" time is the number of boiler operating hours before it needs to be cleaned. During the start-up wizard, the feedwater hardness is entered, and the "maintenance alarm" depends on this value, as shown in the table below:

Water hardness	Maintenance alarm
Demineralised	Cleaning/maintenance 3000 hours (NO STOP)
0-10°f	STOP for cleaning/maintenance 3000 hours
10-20°f	STOP for cleaning/maintenance 1500 hours
20-30°f	STOP for cleaning/maintenance 1000 hours
30-40°f	STOP for cleaning/maintenance 800 hours

Tab. 12.m

If during the wizard the value is set to "automatic", rather than entering the hardness value, the maintenance alarm is automatically associated to the feedwater conductivity read by the conductivity meter. The following table shows the dependency of the maintenance alarm on water conductivity.

Water conductivity	Maintenance alarm
1-50 µS/cm	Warning at 3000 hours without STOP for cleaning-maintenance (it is assumed that the water comes from a reverse osmosis system).
50-100 µS/cm	STOP for cleaning/maintenance 3000 hours
> 100 µS	STOP for cleaning/maintenance 1500 hours

Tab. 12.n

The conductivity is read periodically, and the maintenance alarm times is thus updated as a consequence. Thus, for example, if a water hardness of 15°f is set, the "maintenance warning" time will correspond to 1500 actual boiler operating hours; if the "maintenance pre-alert" time is set to 240 hours (default value), the maintenance pre-alert will be activated after 1260 hours.
The humidifier will signal an alarm (and STOP the unit) for maintenance once the pre-set hours have been reached, plus an additional 120 hours (in the above example, 1500 + 120 = 1620 hours).
It must be stressed that if demineralised water (manual mode) or 1-50µS/cm (automatic mode) are selected, the unit will signal maintenance and cleaning via the warning only, without ever shutting down the humidifier.

12.3.9 Burner rotation/activation

Burner rotation and activation can be configured. gaSteam 180/300/450 manages burner operation according to the setting of the "Burners Sequence" parameter. In normal operation, depending on the humidity request and the selected control mode (series or parallel), the control logic automatically calculates the production for each unit. Rotation of the request involves periodically changing these production references. In the long term, operating hours of the burners are balanced, with consequently more uniform wear of the components and scale build-up in the heat exchangers. There are two types of rotation:

- IN PRODUCTION: timed rotation, i.e. whenever the gap between the operating hours of the two burners reaches 10 hours, the production references are reversed.
- ON IGNITION: the burner with the lowest number of operating hours is ignited first, as long as the difference between the operating hours is greater than 10.

There are also two types of activation:

- **PARALLEL:** the steam request is divided equally between the burners so that steam production is the same;
- **SERIES (also called "sequential"):** if the steam request is less than 50% of the rated production, only one burner is operated. Only if the request exceeds 50% does the other burner start.

Index	Parameter	Description
Ea10	Burner rotation	Set the burner sequence (series or parallel). Burner rotation (in production, on ignition, no rotation)
		Operating hours before rotation.

Tab. 12.o

12.4 Menu E. Settings - b. Functions

12.4.1 Preheat boiler water (Installer menu)

To ensure production starts quickly, the preheat function can be enabled. In this way, even when there is no steam request, the water temperature in the boiler is kept at a value specified by the user. When production is next needed, the water is thus warmer than ambient temperature and consequently production will start faster.

Index	Parameter	Description
Eb02	En. Preheating	Enable preheat
		Set the water temperature to maintain Set water temperature offset
		Default:
		Preheating disabled
		Boiler water temperature set point = 70°C (176°F) Offset = 3%rH (3°C/5.4° F)
		Possible settings Set point: 50 - 80°C (122 - 194°F)
		Possible settings Offset: 2-20%rH (0-20°C / 32-68°F)

Tab. 12.p

The water temperature in the boiler is read by the passive NTC temperature probe in contact with the boiler. The operating principle of the preheat function is described in the following graphs, the first for control with probes, the second for control by external signal.

Preheat with autonomous modulating control with probes

The preheating function, if active, overlaps the control diagram and modulates the power delivered to the heaters in relation to the water temperature and the preheating set point.

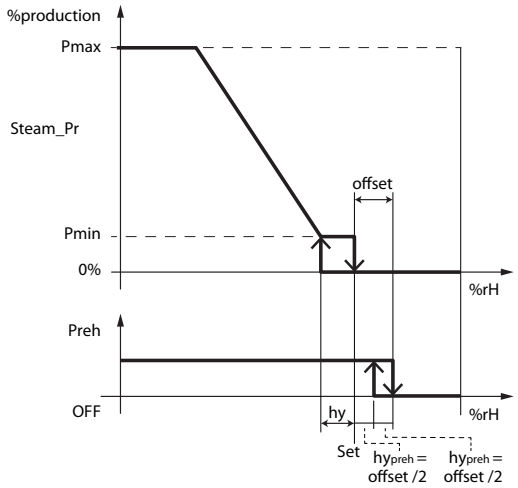

Fig. 12.j

Key

Steam_pr	Steam production
Pmax	Max production
%rH	Humidity measurement
hy	Activation hysteresis
Pmin	Min production
St	Set point
BP	Proportional band

Preheat with control by external signal

The preheating function, if active, shifts the control diagram by a value equal to the "offset". The preheating function modulates the power delivered to the heaters in relation to the water temperature and the preheating set point.

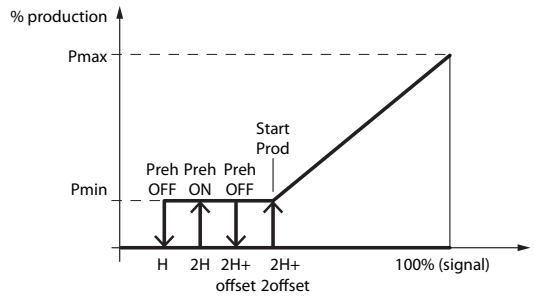

Fig. 12.k

Key

Steam_pr	Steam production
Pmax	Max production
Pmin	Min production
y	External signal

12.4.2 Fill cycles in PWM mode after drain to dilute cycles and high level/foam (Installer menu)

After a drain to dilute cycle or high level/foam, the fill valve is opened to replenish water up to the maximum level of the float. The addition of fresh water affects steam production, as it decreases the average water temperature inside the boiler: to reduce the negative impact of fresh water on steam production, the user can activate PWM mode for the fill cycles after drain to dilute cycles and due to high level/foam.

PWM mode for fill cycles works as follows:
1. the mass of fresh water needed to replenish the water level is divided into smaller amounts of fresh water;
2. by keeping the partial fill cycles as far apart as possible, each small amount of fresh water has more time to heat up before more fresh water is filled. This reduces the negative impact of the fresh water on steam production.

The duration of each fill cycle can be defined in seconds:

Index	Parameter	Description
Eb03	Part fill cycles	Enable part fill cycles.
		Set the part fill duration.
		Default: part fill cycles: enabled fill duration: 5 seconds
		Possible settings 1-199 seconds

Tab. 12.q

12.4.3 Total drain due to inactivity (Installer menu)

For reasons of hygiene, it is recommended to empty the boiler so as to prevent water from stagnating inside when there is no humidification request for an extended period. The user can set the automatic total drain due to inactivity time in hours:

Index	Parameter	Description
Eb04	Drain due to inactivity	Enable drain due to inactivity; set the hours of inactivity without production request that must expire before draining
		Default: drain due to inactivity: enabled; hour threshold: 72 hours
		Possible settings: 1 to 999 hours.
		Remarks: gaSteam must remain on in order to empty the boiler. The display shows "DRAIN TO DILUTE" during the drain due to inactivity cycle.

Tab. 12.r

Automatic total drain due to inactivity cycle is enabled by default and the maximum inactivity time is three days (72 hours). The boiler will be automatically emptied when gaSteam remains on for at least three days without humidification request.

12.4.4 Periodical drain (Installer menu)

If the feedwater is turbid or has a high mineral content, the boiler can be periodically drained in order to clean and dilute the water as much as possible. For this operation to be effective, it is recommended to carry it out at least once every two-three days. The user can set the automatic periodical total drain cycle as follows:

Index	Parameter	Description
Eb05	Periodical drain	Enable periodical drain;
		Set the time between one periodical drain cycle and the next (in hours);
		Default: periodical drain: disabled; hour threshold: 10 hours
		Possible settings: 0 to 999 hours.
		Remarks: gaSteam must remain on in order to empty the boiler. The display shows "PERIODICAL DRAIN" during the periodical drain cycle.

Tab. 12.s

Periodical drain is disabled by default. The periodical drain hour counter considers the effective production time.

12.4.5 Unit status signal or maintenance pre-alert (Installer menu)

The humidifier controller features two relay contacts for remote notification of the maintenance pre-alert or unit status (production). The terminals for these functions are 13U, 14U and 7O, 8O, 9O.

Index	Parameter	Description
Eb07	Signal M5 (13U, 14U)	Set alarm type on output relay M5 Default: maintenance pre-alert
		Normally-closed
	Signal M6 (7O, 8O, 9O)	Set alarm type on relay output M6 Default: alarm (general)
		Normally-closed

Tab. 12.t

Digital outputs M5 and M6 can be configured as follows:

- production
- failed autotest alarm
- high conductivity warning
- level sensor malfunction alarm
- motor protector alarm (overtemperature)
- high boiler temperature alarm
- model not selected
- no water alarm
- low production warning
- main probe broken or disconnected alarm
- limit probe broken or disconnected alarm
- pre-heating probe broken or disconnected alarm
- main wireless probe group not working
- limit wireless probe group not working
- maintenance pre-alert (warning)
- maintenance alarm
- offline

Notice: the alarm shuts the unit down, the warning is an alert only.

M5 (13U, 14U) = maintenance pre-alert	maintenance early warning signal, helps plan maintenance in advance. See the paragraph "Boiler operating hours" for more details on pre-alert configuration
M6 (7O, 8O, 9O) = alarm (general)	The general alarm (associated, for example, with output M6 - 7O, 8O, 9O) considers all the alarms with shutdown in the list, unless the alarm in question is selected for the other digital output (in this example M5 - 13U, 14U).

12.4.6 Blower unit configuration (Installer menu)

To best manage the blower units in applications where steam is delivered directly into the room, the blower on and off times can be set. Delaying activation of the blower unit allows the system to reach the operating temperature before the fan is activated. Delaying deactivation of the blower unit guarantees that parts in contact with the steam will be completely dried, and that when next starting, there is no condensate in the blower (no droplets delivered into the room).

Index	Parameter	Description
Eb08	Blower unit	Set the delay time (seconds) for activation and deactivation of blower units
		Default: start delay: 0 s shutdown delay: 90 s
		Possible settings: 0 to 600 s

Tab. 12.u

12.4.7 Save logs (Service and Installer menu)

The log of the main variables can be saved to USB pen drive; these are:

- Unit On/Off
- Unit status
- Active alarms
- Request (%)
- Production (kg/h)
- Level sensor status
- Fill
- Drain

The file is saved in .csv format. The logs are constantly saved to internal memory. To export them to the pen drive in the USB Host port, enter menu screen Eb09. Set "Export to USB" to "YES". Progress of the operation will be shown under "progress".

Index	Parameter	Description
Eb09	Export logs	Save the log of main variables to USB pen drive
		Export to USB = Yes, to save the log

Tab. 12.v

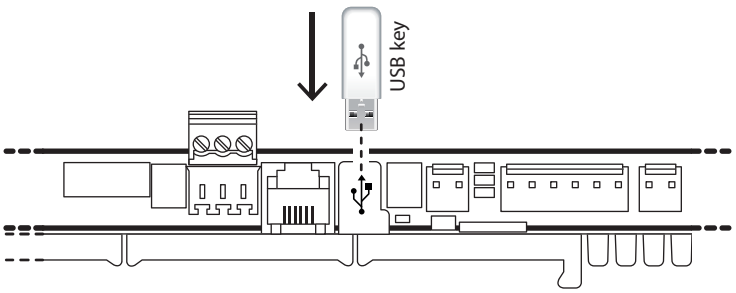

Fig. 12.l

12.4.8 Save alarm log

The alarm log can be saved to USB pen drive. To export the file, plug the USB pen drive into the c.pHC and go to screen Eb10, then set "YES" for the "Export?" parameter.

Index	Parameter	Description
Eb10	Export alarms	Save alarm log to USB pen drive Default: No

Tab. 12.w

The file will be saved in the pen drive's root directory and will be called "AlrmLog.txt".

12.4.9 Frost protection

The temperature of the unit is controlled using the burners. When the internal temperature measured is lower than the value of the "Forced preheating threshold" parameter (default value = 10°C (50°F)), the unit switches on the burners to keep the water and therefore the humidifier warm. If the temperature inside the unit is lower than the temperature set for the "Pump drain threshold" parameter (default value = 5°C (41°F)), the unit completely drains the water inside the boiler.

Index	Parameter	Description
Eb11	Frost protection	Set the frost protection function with burner management.
		Set the safety function to completely drain the water in the boiler.

Tab. 12.x

In addition to these functions, on outdoor models there is also a normally-open valve connected to a temperature probe (independent), which completely drains the boiler if it measures a temperature of 3°C (37.4°F) (default value, can be set manually). In addition, special heaters can also be installed inside the unit, which work independently (kit to be purchased separately: P/N UGKHEAT230 for models powered at 230 Vac). The recommended calibration temperature for the heaters is 8°C (46.4°F).

IMPORTANT: the heater must be powered separately from the humidifier, and not interrupted by the ON-OFF switch.

Notice: in the 115 V 60 Hz version "X" (-40/+45°C) models, the heaters (spare part kit: UGKHEAT115) are already supplied.

12.5 Menu E. Settings - c. Configuration

12.5.1 Main probe (Installer menu)

The main probe can be configured on the screen with index Ec01.

Index	Parameter	Description
Ec01	Main probe	Main probe configuration;
		Default: Enable: enabled (depending on the type of control) Type: 0-10 V Minimum: 0% rH Maximum: 100% rH Offset: 0 En. Al (enable alarms): YES YES Del.: 120 seconds
		Possible settings: Type: 0 - 10V/0 - 1V/NTC/4 - 20mA/0 - 20mA/2 - 10V Minimum: 0-100% rH Maximum: 0-100% rH Offset: 0 En. Al (enable alarms): YES YES Del.: 0-999 seconds

Tab. 12.y

For each probe, after having specified the type, the minimum and maximum values readable can be defined, as well as an "offset" to compensate for any imprecisions in the value read (example: offset = 3% rH corresponds to 3 percent increase of the humidity value read by the probe). Parameter "En. Al." activates the alarms corresponding to any probe faults. If a malfunction is detected for a time greater than the value of "Del." (seconds), the "Main probe broken or disconnected" alarm will be activated.

12.5.2 Limit probe (or second probe - Installer menu)

The limit probe (if present) can be configured on the screen with index Ec02.

Index	Parameter	Description
Ec02	Limit probe/2nd probe	Limit probe configuration;
		Default: Enable: enabled (depending on the type of control) Type: 0-10 V Minimum: 0% rH Maximum: 100% rH Offset: 0 En. Al (enable alarms): YES YES Del.: 120 seconds
		Possible settings: Type: 0 - 10V/0 - 1V/NTC/4 - 20mA/0 - 20mA/2 - 10V Minimum: 0-100% rH Maximum: 0-100% rH Offset: 0 En. Al (enable alarms): YES YES Del.: 120 seconds

Tab. 12.z

The same explanations provided in the previous paragraph also apply here.

12.5.3 Wireless probes (Installer menu)

Configuration of the wireless probes involves defining the weight of each probe; for further details on the averages see paragraph 7.2.2 "Weighted average of the probes". Screen Ec03 can be used to deactivate, activate as main probe or limit probe each of the four possible wireless probes.

Index	Parameter	Description
Ec03	Wireless probes	Wireless probe configuration (main and limit)
		Default: Probe 1: disabled Probe 2: disabled Probe 3: disabled Probe 4: disabled
		Possible settings: disabled, main probe, limit probe

Tab. 12.aa

To configure the wireless probes, weights and communication times, use screens Ec04, Ec05, Ec06 and Ec07, depending on the number of probes connected.

Index	Parameter	Description
Ec04 Ec05 Ec06 Ec07	Wireless probe 1 Wireless probe 2 Wireless probe 3 Wireless probe 4	Configure probe weight and communication times;
		Default: Weight: 100 Transmission time: 10s Disconnection delay: ms
		Possible settings: Weight: 0 to 100 Transmission time: 5-3600 seconds Disconnection delay: ms

Tab. 12.ab

Notice:

- if wanting to use two wireless probes, simply set "humidity (one probe)" control (Ea01) and then activate the two wireless probes on screen Ec03;
- "humidity+limit" control (Ea01) can also be used, in this case on screen Ec03 choose which of the four wireless probes is the limit, and set the others as main;

12.5.4 Maximum number of evaporation cycles between drain to dilute cycles settable by the user (Installer menu)

The "Evaporation cycles before drain" parameter is used to manually set the maximum number of evaporation cycles allowed between two drain to dilute cycles. The number of evaporation cycles between two successive drain to dilute cycles can also be calculated internally, based on feedwater conductivity. To use the automatic formula, set "Evaporation cycles before drain" = "Auto". The number of evaporation cycles used by the controller will be the lower of the value set manually by the user and calculated automatically.

Index	Parameter	Description
Ec11	Number of evaporation cycles before drain	Set the number of evaporation cycles between two drain to dilute cycles.
		Default: number of cycles: Auto;
		Possible settings: Auto (automatic management according to feedwater conductivity): 1-40

Tab. 12.ac

12.5.5 Duration of the fill and drain to dilute cycles settable by the user (Installer menu)

On screen Ec12, the duration of the fill time after the evaporation cycle and the duration of the drain to dilute cycle can be set in relation to the default parameter values.

Index	Parameter	Description
Ec12	Variation in fill and drain time	Set the fill after evaporation and drain to dilute times in relation to the default values
		Default: variation in fill time: 100% variation in drain time: 100%
		Possible settings: variation in fill time: 20-100% variation in drain time: 0-190%

Tab. 12.ad

The duration of the drain to dilute cycle is set using the "variation in drain time" parameter, which defines the time as a% of the default value:
new drain time = (default drain time × variation in drain time)/100

Example: if the default time is 10 s and "variation in drain time" = 50%, then the new time will be = 10 s x 50/100 = 5 s.

The same also applies to the fill time after the evaporation cycle, in this case using the "variation in fill time" parameter:
new fill time = (default fill time × variation in fill time)/100

IMPORTANT: if the drain to dilute time is very short, there may be the RISK OF FOAM/CORROSION due to increased internal conductivity. Low values should be set for the "variation in drain time" parameter only after having carefully evaluated the water quality and the consequences.

IMPORTANT: RISK OF FOAM FORMING WHEN "variation in drain time" IS TOO LOW FOR THE WATER QUALITY.

- "variation in drain time" = 100 % means that the default value will be used.
- "variation in drain time" < 100 % means that the drain time will be less than the default, consequently introducing less fresh water when next refilling, reducing the negative impact on steam production (important in high-precision applications).
- Setting the "variation in drain time" for precise %RH control: the "variation in drain time" must be set as low as possible, without however causing formation of foam/corrosion. Proceed by trial and error so as to find the most suitable value.

Notice: the duration of the water fill cycle can be used to offset water pressure upstream of the humidifier. Decrease the fill time in the case of high pressure and vice-versa. Nonetheless, feedwater pressure must be within the range of pressure values specified in "General characteristics and models" (1-8 bars)

12.5.6 Set feedwater hardness (Installer menu)

To read feedwater hardness, an analysis kit is available (P/N: KITTH00000). The "Water hardness" parameter defines the maintenance alarm for cleaning the boiler and the heat exchanger.

Index	Parameter	Description
Ec13	Water hardness	Set the feedwater hardness
		Possible settings: Hardness: Auto, Manual Manual setting: demineralised, 0-10°f, 10-20°f, 20-30°f, 30-40°f.
		Remarks: if the value is set to Auto, the water hardness is estimated by the controller based on the conductivity value.

Tab. 12.ae

If water hardness is not set, the controller independently manages the type of water based on the conductivity reading. Although there is no reliable relationship between water hardness and conductivity, a hardness of 40°f is typically equivalent to a conductivity of approximately 900-1000 µS/cm at 20°C. See "Boiler operating hours" for information on the maintenance alarm times in relation to water hardness or conductivity.

12.5.7 No feedwater setting (Installer menu)

In the event of no feedwater, the corresponding "No water" alarm is displayed. After the alarm has been displayed and the "no feedwater time" has elapsed, the controller attempts a new fill cycle. At each attempt, the "no feedwater time" is multiplied by the number of times it has already been carried out. The controller therefore performs a series of attempts to refill with water, for a maximum time of five hours after the alarm occurs. The alarm is reset only if the water level effectively reaches the intermediate position (yellow LED).

Index	Parameter	Description
Ec14	Retry time with no water	Set the time to check for no feedwater.
		Default: 10 minutes
		Possible settings: 0-20 minutes
		Step: 1 minute
		Remarks: if the value is set to 0, no more attempts will be made to refill the water and the alarm will not be reset

Tab. 12.af

12.5.8 Enable and set high conductivity alarm (Installer menu)

The controller allows conductivity thresholds to be set for the activation of alarms when the limits are exceeded. Excessive conductivity and consequently high concentration of salts in the feedwater can be signalled. These alarm thresholds are programmable using the following parameters:

Index	Parameter	Description
Ec15	High conductivity	Enable the high conductivity alarm and set the alarm delay.
		Default: enabled: YES alarm delay: 60 seconds
		Possible settings: enabled: YES/NO; alarm delay: 0-300 seconds
		Remarks: once the threshold has been exceeded (if the alarm is enabled), the controller waits for the "alarm delay" to elapse before displaying the alarm. If during this waiting time the conductivity falls back below the threshold, the alarm is not activated. This helps avoid false alarms due to variations in the conductivity reading.

Tab. 12.ag

12.5.9 Set high conductivity alarm thresholds (Installer menu)

Two high conductivity thresholds can be set. If exceeding:
- the first (lower) threshold, a warning is shown without stopping operation;
- the second (higher) threshold, an alarm is activated and the unit shuts down as a precaution.

Index	Parameter	Description
Ec16	High conductivity	Set the high conductivity thresholds.
		Default: warning: 1250 µS/cm alarm: 1500 µS/cm hysteresis: 25 µS/cm
		Possible settings: warning: 0-1500 µS/cm alarm: 0-1500 µS/cm hysteresis: 0-100 µS/cm
		Remarks: the hysteresis is used to reset the alarm if the conductivity falls below the threshold minus the "Hysteresis".

Tab. 12.ah

12.5.10 Remote ON/OFF operating logic (Installer menu)

Screen Ec22 is used to set the operating logic of the remote ON/OFF contact (normally open or normally closed).

Index	Parameter	Description
Ec22	Remote ON input logic	Set the operating logic of the remote ON/OFF input
		Default: Remote ON input logic = N.O
		Possible settings: Remote ON input logic: N.O., N.C.

Tab. 12.ai

12.5.11 Fan speed setting

Set the fan speed for minimum and rated production. These values are set by default to ensure the correct air/gas mix with the natural gas Pre-purge speed. The pre-purge speed is indicated in "RPM" and is normally set by the manufacturer based on the characteristics of the combustion system and the gas.

IMPORTANT: these parameters must only be modified by qualified personnel.

Display	Value and notes	Default	Unit of measure
Pre-purge	Pre-purge fan speed set points	UG045 = 2500	RPM
		UG090 = 2500	
		UG150 = 2500	
		UG180 = 2500	
		UG300 = 2500	
		UG450 = 2500	
Min. speed	Fan speed at minimum prod. Set the fan speed set point at minimum production	UG045 = 1450	RPM
		UG090 = 1700	
		UG150 = 1900	
		UG180 = 2000	
Min. speed	Fan speed at minimum prod. Set the fan speed set point at minimum production	UG300 = 1900	RPM
		UG450 = 1900	
Max speed	Fan speed at rated prod. Set the fan speed set point at rated production	UG045 = 4700	RPM
		UG090 = 5050	
		UG150 = 6750	
		UG180 = 5300	
		UG300 = 6750	
		UG450 = 6750	

Tab. 12.aj

Index	Parameter	Description
Ec23	Set burner 1	Set pre-purge speed, minimum speed and maximum speed for rated steam production
Ec24	Set burner 2	Set pre-purge speed, minimum speed and maximum speed for rated steam production
Ec25	Set burner 3	Set pre-purge speed, minimum speed and maximum speed for rated steam production

Tab. 12.ak

12.5.12 Burner calibration

Also see the chapter "Preparing for operation". The Burner Calibration submenu is used to access the procedure for configuring and calibrating the burners on the humidifier.

Two types of gas can be selected:
- Natural gas (G20-G25);
- LPG (G30-G31).

Notice: on selecting the type of gas, the humidifier automatically sets all the control parameters for correct operation with that specific family of gas.

Index	Parameter	Description
Ec28	Burner calibration	Start the procedure to calibrate the burners. Follow the instructions shown on the display

Tab. 12.al

Guided calibration is a step-by-step procedure that helps the installer correctly set up the burner.
It is divided into three different steps:
1. Calibration at maximum fan speed (maximum output delivered by the humidifier);
2. Calibration at minimum fan speed (minimum output delivered by the humidifier=;
3. Verification of calibration at maximum output.

The first step once the type of gas has been selected; the humidifier will be switched on, if off, and operated at the maximum output available. The screen will show info on the unit operating status, such as pre-purge, fan speed and waiting. Wait for the humidifier to reach maximum output, then calibrate the gas valve (see "Type of calibration"), adjusting it so that the percentage of CO2 measured is within the allowed range. Repeat the operations for the other two steps, following the instructions shown on the screen, to complete the calibration procedure.

Notice:
- if an alarm is activated during calibration, the procedure stops and a warning message is shown;
- If during calibration no button is pressed for 5 minutes, the procedure will be interrupted and the unit will return to normal operation.

12.6 Menu E. Settings - d. Main/Secondary

12.6.1 Main/Secondary system network settings (Installer menu)

To increase total production capacity when one single unit is not sufficient, the Main/Secondary function can be used to connect up to 20 units together in just one system. To set and enable the individual units in the system, go to the "Network" menu, specifically starting from screen Ed01.
Initial Main/Secondary system configuration:

Index	Parameter	Description
Ed01	Main/Secondary	Initial Main/Secondary system configuration Press "PRG" to configure the Main/Secondary network
Ed02	Unit 1 Unit 2 - - Unit 20	Add unit to the Main/Secondary system To add a unit to the network enter the unit's IP address. Scroll between the units using the UP/DOWN buttons

Tab. 12.am

Main/Secondary system function configuration: from screen Ed07 (Main/Secondary production) press "PRG" for the following settings:

Index	Parameter	Description
Ed02	Unit 1 Unit 2 - - Unit 20	Add unit to the Main/Secondary system.
		To add a unit to the network enter the unit's IP address. Scroll between the units using the UP/DOWN buttons
Ed03	Main/Secondary system maximum production Unit rotation	Set maximum production of the Main/Secondary system. Load: this is the maximum capacity effectively required for the Main/Secondary system, settable by the user.
		Maximum: this is the sum of the maximum capacities of the units added to the Main/Secondary system
		Set the unit rotation logic.
		Rotation: Grouped (Default), Balanced
Ed04	Advanced preheating Rotation time	Enable the advanced preheating function for Main/Secondary systems.
		Possible settings: YES/NO
		Set the auto-rotation time between units Possible settings 0-65535 hours (Default 3 hours).
		If auto-rotation time = 0 the function is disabled.
Ed05	Offline timeout	Set the offline time for units in the Main/Secondary system
		Possible settings: 500-10000
Ed06	Disconnect unit from Main/Secondary system	Disconnect the current unit from the Main/Secondary system YES/NO
		Remarks: this disconnects and removes the current unit from the Main/Secondary system.

Tab. 12.an

Display the maximum production of the Main/Secondary system.

Index	Parameter	Description
Ed07	Production Main/Secondary	Display the request (%) and the production (kg/h / lbs/h) of the Main/Secondary system

Tab. 12.ao

Display unit status and the percentage of production for each unit in the Main/Secondary system:

Index	Parameter	Description
Ed08	Display Main/Secondary system	Unit status with corresponding % of production
Ed09	Display info on individual unit. Unit 1 Unit 2 to Unit 20	Display unit operating hours, current production and any alarms To move between the various units use the UP/DOWN arrows The display is available for each unit

Tab. 12.ap

Maintenance on the units in the Main/Secondary system:

Index	Parameter	Description
Ed10	Unit switched off for maintenance.	Unit switched off to carry out maintenance.

Tab. 12.aq

For detailed information on the Main/Secondary system, see the chapter "Main/Secondary system".

12.7 Menu E. Settings - e. Backup

12.7.1 Enable backup unit (Installer menu)

In some critical applications where relative humidity control is very important, it may be essential have a backup unit available in the event of malfunctions on the main unit. To enable the backup unit, go to screen Ee01:

Index	Parameter	Description
Ee01	Enable backup	Enable automatic unit backup in the event of shutdown, using a second independent unit
		Default: Disabled
		Possible settings: Enabled/Disabled

Tab. 12.ar

After having enabled the backup function, the unit that will start first in the event of simultaneous activation can be selected.

Index	Parameter	Description
Ee02	Priority when starting	Define the priority of the units when in backup mode
		Default: Disabled
		Possible settings: Enabled/Disabled

Tab. 12.as

The priority must be set to "YES" only on one of the two units; the "priority" parameter on the second unit must be set to "NO".

12.8 Menu E. Settings - f. Manual mode

12.8.1 Manual mode (Service and Installer menu)

During first start-up or maintenance, "manual mode" may be useful in order to check the operation of the main devices on the humidifier. Manual mode is only available when the unit is OFF and without any active alarms. In addition, to safeguard the unit, the heaters can only be activated when there is water in the boiler (high level, corresponding to green LED on)

IMPORTANT: manual mode should only be activated by qualified personnel; improper use may cause serious damage to the unit.

Index	Description	Parameter
Ef01	Manual mode	Enable "Manual mode" to check operation of the individual components.
		Default: Disabled
		Possible settings: Disabled, manual outputs, manual production
		Remarks: when exiting "Manual mode", the settings are restored and normal operation resumes automatically. If the user does not set any parameters in the "Manual mode" menu for 30 minutes, manual mode is automatically disabled.
Ef02	Manual management of outputs	Enable "Manual mode" to check operation of the individual components.
		Test fill valve Test drain pump
		Activate the blower relay
Ef03	Manual request management	Manually set the production request.

Tab. 12.at

12.9 Menu E. Settings - g. Initialisation

12.9.1 Initial wizard (Service and Installer menu)

The Wizard menu, screen index Eg01, is used to initiate step-by-step programming of the parameters required for commissioning the unit. Below are the steps included in the first start-up procedure (some steps may not be displayed, if not necessary):
1/9 - Choose the model (only if the replacement controller is not configured);
2/9 - Water hardness: auto or user; defined;
3/9 - Manual water hardness setting;
4/9 - Control type;
5/9 – Select the main room probe type:
6/9 – Select the limit probe type;
7/9 - Set the limits for active probes;
8/9 - Set the drain to dilute cycles: auto or user-defined;
9/9 - Set manual drain to dilute cycles.

Index	Parameter	Description
Eg01	Wizard	Start the wizard for initial unit configuration
		Set whether to display the wizard when next restarting
		Default: wizard enabled: YES

Tab. 12.au

For further information, see "Activation sequence".

12.9.2 Set the language (Service and Installer menu)

The first time that the unit is powered on, the menu language needs to be selected. To change the language, go to screen Eg02. Press "ENTER" and UP/DOWN to set, ESC to exit without changes.

Index	Parameter	Description
Eg02	Language	Set the language.
		Default: English
		Possible settings: 1. English 2. Italiano 3. Deutsch 4. Français 5. Español

Tab. 12.av

12.9.3 Set the unit of measure (Installer menu)

Screen Eg03 is used to select the units of measure: International (°C, kg/h) or Imperial (°F, lb/h). In addition, the language selection screen when starting can be disabled.

Index	Parameter	Description
Eg03	Units of measure and language when starting	Select the units of measure. Show change language when starting.
		Default: unit of measure: depending on part number, show change language when starting: YES
		Possible settings: unit of measure: International, Imperial, show change language when starting: YES, NO

Tab. 12.aw

12.9.4 Set and change passwords (Service and Installer menu)

Screen Eg04 is used to change and/or set the passwords: Service and Installer
The passwords are 4-digit numbers. The default Installer password is: 0077. The default Service password is: 0044.

Index	Parameter	Description
Eg04	Change password	Set and change the passwords
		Default: Installer: 0077
		Service: 0044

Tab. 12.ax

12.9.5 Factory reset (Service and Installer menu)

To reset all parameters to the default values, use screen Eg06.

Index	Parameter	Description
Eg06	Inst. Default	Unit factory reset.
		Remarks: follow the directions shown on the display
		Confirmation will be requested before resetting the values

Tab. 12.ay

IMPORTANT: when performing a reset, all the control settings will be lost and the values will return to the factory defaults.

12.9.6 Software update from USB pen drive

The update package can be downloaded from ksa.carel.com. The unit's software can be updated using a USB pen drive plugged directly into the c.pHC controller. In the pen drive's root directory, create an UPGRADE directory and copy the software update file to this directory. Once having plugged the pen drive into the controller, go to screen Eg07 and set the "Update unit software" parameter to "YES".

Index	Parameter	Description
Eg07	Software update	Start software update from USB pen drive
		Default: No

Tab. 12.az

The steps to update the SW/OS (software/operating system) are:
- Save user parameters;
- SW/OS upgrade;
- Restore default parameter values;
- Write user parameters.

Once the update is complete, remove the USB pen drive from the controller.

After updating, the main user parameters do not need to be configured as the update automatically restores them.

12.9.7 Export parameters to USB pen drive

The unit's parameter configurations can be exported to USB pen drive, and subsequently loaded onto a second unit, making installation and setup even faster. To save the parameters, plug the USB pen drive into the c.pHC and then go to screen Eg08 and set the "Export?" parameter to "YES".

Index	Parameter	Description
Eg08	Export parameters	Start exporting configuration from unit to USB pen drive
		Default: No

Tab. 12.ba

The exported file will automatically be saved in the pen drive's root directory and will be called: "UG4cgg.txt"

12.9.8 Import parameters onto the unit

The unit's parameter configurations can be imported from a USB pen drive. To import the parameters, make sure that the exported file is in the pen drive's root directory and is called: "UG4cgg.txt". Then plug the USB pen drive into the c.pHC and go to screen Eg09, and set the "Import?" parameter to "YES".

Index	Parameter	Description
Eg09	Import parameters	Start importing configuration from USB pen drive to unit
		Default: No

Tab. 12.bb

12.10 Menu E. Settings - h. Supervisor

12.10.1 Supervisor network address setting (Installer menu)

Supervision can be enabled on the Ethernet network or BMS serial port. The following protocols are available to be set by the user:

Port	Protocol
BMS	Carel, ModBus, BACnet
Ethernet	ModBus, BACnet

On screen Eh01, the port and supervisor protocol can be set, as well as the unit's supervision address for the BMS port.

Index	Parameter	Description
Eh01	Unit supervision address on BMS port	Set the unit's supervision address and protocol for BMS port.
		Default: Address: 1; Protocol: Modbus; On/Off from SV: No; Control from SV: No;
		Possible settings: Address: 1 to 247 Protocol type: Modbus, BACnet, Carel

Tab. 12.bc

Address is the device's supervision address on the BMS port. Enabling or disabling the parameters "On/Off from SV" and "Control from SV" activates or deactivates the response to the corresponding signals from the supervisor. For other supervisor protocols, select Carel protocol and use the Carel external gateway (supernode for humidification).

12.10.2 BMS port (Installer menu)

Screen Eh02 is used to set supervisor communication on the BMS port.

Index	Parameter	Description
Eh02	BMS port communication settings	Set the supervisor communication parameters via BMS: baud rate, stop bits and parity bits
		Default: Baud rate: 19200 Stop bits: 2 Parity: None

Tab. 12.bd

12.10.3 BACnet MS/TP supervisor settings (Installer menu)

To set the address, maximum number of Main units and maximum number of frames for BACnet MS/TP supervision systems, use screen Eh03. The screen is only displayed when supervision is configured on the BMS port with the BACnet protocol.

Index	Parameter	Description
Eh03	BACnet MS/TP configuration	Set the address, maximum number of Main units and maximum number of frames
		Default: Address: 0 Max Mains: 127 Max frames: 10

Tab. 12.be

For BACNet MS/TP, in addition to setting the parameters in screen Eh03, it is also necessary to set the parameter on screen Eh06

Index	Parameter	Description
Eh04	Device instance	Default: 77000

12.10.4 Ethernet network (Installer menu)

To connect the unit to the local Ethernet network for operation in Main/Secondary mode, software Backup/Rotation or use the webserver, set the DHCP, IP, subnet mask, gateway and DNS parameters.

IMPORTANT: these values must be provided by the local network administrator.

Index	Parameter	Description
Eh05	Ethernet network settings	Set the unit's IP address for the Ethernet connection.
		Set DHCP, subnet mask, gateway, DNS.
		Default: DHCP: Off IP: 192.168.0.1 (unit's IP address) Mask: 255.255.255.0 (subnet mask) GW: 192.168.0.1 (gateway) DNS: 0.0.0.0 Update?: NO

Tab. 12.bf

The following values are set by default on each unit:

- DHCP: Off
- Unit's IP address: 192.168.0.1 subnet mask 255.255.255.0
- gateway: 192.168.0.1
- DNS: 0.0.0.0

After having modified the parameters, set the "Update?" parameter to "YES" to update the IP address. To start the update, set the "Update?" parameter to "YES".

IMPORTANT: the controller is not accessible directly on the internet as a firewall guarantees remote access only via a secure connection (Carel tERA cloud or encrypted VPN connection).

12.10.5 Supervisor settings for ModBus or BACnet on TCP/IP (Ethernet port) (Installer menu)

Both Modbus and BACnet are available on the Ethernet port; to enable the protocol go to screen Eh06:

Index	Parameter	Description
Eh06	Supervisor settings for Ethernet port	Select the protocol on the Ethernet port
		En. ModBus TCP/IP: Enabled/Disabled En. BACnet TCP/IP: Enabled/Disabled Default: En. ModBus TCP/IP: Disabled En. BACnet TCP/IP: Enabled

Tab. 12.bg

If using the BACnet protocol, the address must be set on screen Eh04.

Notice: only one instance of the BACnet protocol is available, therefore it is not possible to activate BACnet on the BMS port and on the Ethernet port at the same time.

12.10.6 Supervisor port

With control from supervisor, the unit can be enabled and/or sent a production request without using the control algorithms. Once the communication port for supervisor-unit interaction has been selected, screen Eh08 will be available for enabling or disabling the supervisor offline alarm.

Index	Parameter	Description
Eh07	Enable control from supervisor	Set supervisor port
		Enable On/Off signal from supervisor
		Enable control from supervisor
Eh08	Enable control from supervisor	Enable supervisor offline alarm

Tab. 12.bh

12.10.7 Monitoring service settings

Monitoring service refers to a system that does not have the ability to manage/act on the unit, but rather simply monitor its operation. The parameters relating to the management of an external monitoring service are shown on screen Eh09.
However, a unit pause signal from an external source can be managed and disabled by activating the corresponding bypass. The bypass can be deactivated manually or reset automatically after a unit paused reset delay.

Index	Parameter	Description
Eh09	Monitoring service settings	Display unit paused by monitoring service status
		Set unit paused by monitoring service bypass
		Unit paused bypass automatic reset delay

Tab. 12.bi

To restart, simply press the "ENTER" button when the following flashing message is shown:

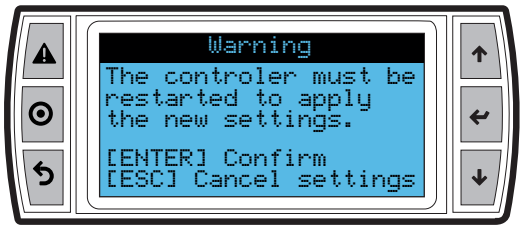

Fig. 12.m

12.11 Menu E. Settings - i. Logout

12.11.1 Logout from the settings menu (Installer and Service menu)

In "character terminal" mode, screen EI01 screen is used to exit the Settings menu and logout. The screen also describes the type of login performed (installer or service). When accessing this screen, the following information will be shown (in the currently selected language). To log out, press "ENTER"": the main screen will then be shown again. Press "ESC" to exit if not wanting to end the session.
To logout, use the icon (1 - Fig. 12.n) available in the "Settings" menu

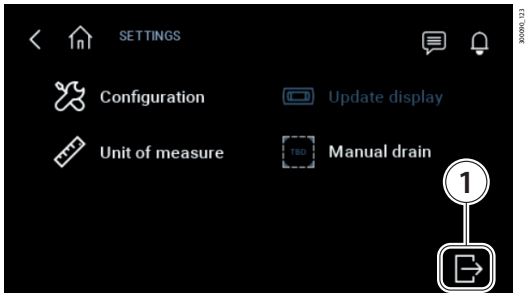

Fig. 12.n

12.12 Touch display: software update

To update the touch display, simply enter the system menu (from the home page), Settings menu and enter the password. The following screen will be displayed:

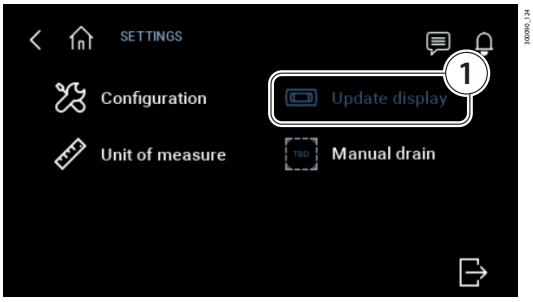

Fig. 12.o

Plug the USB key into the display (the mini USB port on the display is accessible from inside the electrical panel (outdoor model) or from inside the front panel (indoor model), the "update display" menu (1 - Fig. 12.o) will be active. Click this menu and follow the steps described on the display to update the software.

13. MAIN/SECONDARY SYSTEM

13.1 System configuration

Systems set up in this way will be able to cover the humidification requirement. In this specific case, the Main unit will always be the unit with the lowest IP address of those connected to the signal/probes. If necessary, an additional humidifier (backup) can be installed to cover request in the event of malfunctions on one of the units in the system.
To configure the Main/Secondary system, proceed as follows:

1. Connect the probes or the external signal to the unit and complete the configuration (control type, type of signal, maximum production …);
2. Set the IP addresses of the individual units so that they belong to the same subnetwork (subnet mask); the screen index for this configuration is Eh02 (E. Settings – h. Supervisor). The IP address is set on the display on each unit, assigning a different address to each unit in the same subnetwork. If necessary, contact the local network administrator. Remember that the default address for each unit is 192.168.0.1, and the default subnet mask is 255.255.255.0.
3. Connect the units making up the Main/Secondary system to the local Ethernet network via a switch. If using just two units, an RJ45 category 5 cable can be used, connected directly to the Ethernet ports on the two c.pHC controllers.
4. Configure the Main/Secondary system by enabling the units one at a time (this operation can be performed on the display on any of the units):
   I. Display screen index Ed01 and then access configuration mode by pressing "PRG";
   II. Enter the IP address for "Unit 1" and confirm by pressing "Enter";
   III. Repeat the operations described above (1 and 2) for all the other units in the Main/Secondary system. (The units will join the Main/Secondary system (online status) immediately after being connected to the network.)

Notice:

- the Main unit will always (automatically) be the one with the lowest IP address out of the units connected to the probes or external signal;
- it may take a few seconds (max 10 s) for the Main to start sending the production request to the Secondary/Slaves. This is also true when, automatically, the Main unit is changed (for example, in the event of malfunctions).

A cascaded connection of several units can also be made by simply using terminals 11U and 12U, which provide the production request (0-10 V).

13.1.1 Maximum production

In the same way as for the individual unit configuration, for the Main/Secondary system the maximum capacity can also be set.

Procedure: Enter menu Ed07 (E. Settings - d. Network), press PRG and scroll with UP/DOWN until reaching menu Ed03. The "Capacity" parameter identifies the maximum production request for the Main/Secondary system, and can therefore be set by the user. The "Maximum capacity" parameter (read-only), on the other hand, indicates the sum of the sizes of each unit added to the system; this value is therefore the maximum effectively available to the Main/Secondary system. Consequently, "Capacity" will always be ≤ "Maximum capacity". In any case, the maximum production can be defined for each individual unit in the system by limiting production from its maximum according to the size. In this case, "Maximum capacity" will be updated keeping in consideration these reductions.

13.1.2 Rotation logic

The activation logic of the units in the Main/Secondary system can be set, choosing between "Grouped" or "Balanced" (screens Ed03 and Ed04). On screen Ed07 (E. Settings - d. Network), scroll with UP/DOWN until reaching Ed03 or Ed04 (NB: Ed04 is only visible if rotation is enabled on Ed03).

Grouped:

- the units are activated in series, one after the other, according to the request.

If the steam request does not require operation of all of the units, rotation can also be divided between the units with the lowest operating hours (auto-rotation function), so as to ensure uniform operation of the units over time (same number of operating hours). To enable and configure the rotation times, the "auto-rotation time" parameter must be set on screen Ed04.

Notice: if the "auto-rotation time" parameter is = 0, the auto-rotation function is disabled.

Balanced:

- the units are activated in parallel at the same time, splitting the total production request between the number of units.

13.1.3 Advanced preheating

Notice: the function has meaning only in the case of "Grouped" rotation.

By activating the advanced preheating it is possible to automatically pre-activate the Secondary units that are currently in stand-by. When the request reaches 90% of production (of the units currently in production), the preheating of the remaining units is activated. The function is enabled/disabled on screen Ed04.

13.1.4 Disconnecting a unit

To remove a unit from the Main/Secondary system, thus reducing the number of units available in the system, use the "Disconnect unit" function on screen Ed06. This can be done on any of the humidifiers in the system.

Notice: once the unit has been disconnected, this will no longer be visible in the Main/Secondary system, as its IP address will be removed from the list. If a unit is disconnected erroneously, the system can be restored on screen Ed01 (entering its IP). This must be done from the display on a unit that is already connected to the system.

13.1.5 Display the system

To display a summary of the Main/Secondary system, go to screen Ed08. From screen Ed07 (E. Settings - d. Network), press DOWN to access menu Ed08. This has a total of five pages that display all of the units (01, 02, ..., 20), the status of each unit and current production as a percentage. The following table lists the Main/Secondary network unit status indications:

Symbol	Unit status
	Current unit (unit being accessed, display or web server)
	Online
	Offline
	Not configured and not included in the Main/Secondary system

Tab. 13.a

The units in the Main/Secondary system can also be selected one by one, displaying maximum production, unit status, operating hours, current production request and any alarms. To enter this display, from screen Ed08, select the desired unit and press ENTER, thus accessing screen Ed09. Scroll using the UP/DOWN buttons to display the details of all the units.

13.1.6 Software backup

Main/Secondary mode can also be used to manage the software backup function; if one or more units in the Main/Secondary system is affected by a malfunction, the system automatically restores humidification production by activating the backup units. The lost production in relation to the request is thus compensated by increasing production on the individual units (where possible) and/or starting any units in standby. Even if not strictly necessary, to ensure the backup function, the external control signal must be sent to all the units in the Main/Secondary system; if using probes on the other hand, each unit must be fitted with a probe. Only in this way can complete operation be guaranteed in the event of malfunctions.

Notice: if a unit goes offline due to a malfunction or shutdown, it will temporarily be excluded from the system, and when next restarted it may take 15 seconds or more to automatically come online again.

13.1.7 Software backup for maintenance

During maintenance or cleaning on a unit in the Main/Secondary system, the backup for maintenance function can be activated. This allows production to start on a unit in standby, set as backup, before switching off the humidifier in question for maintenance. In this way, service continuity can be guaranteed in applications where required humidity control is very precise and continuous over time.

Procedure:
1. Access screen Ed07 (Network);
2. Press DOWN to display the list of units (Ed08);
3. Scroll to the unit on which maintenance is required (Unit 1, Unit 2, …) and press ENTER to confirm (screen Ed09).
4. Press PRG to access screen Ed10 and set "Request switch unit off" = YES. Wait for the display to show the message: "The unit can now be switched off for maintenance" and then switch the unit off.

Once maintenance has been completed, simply switch the humidifier on again, and it will automatically come back online.

Notice: to activate the advanced software backup functions for maintenance, the backup unit must be connected to the probes or external signal.

14. WEB SERVER

14.1 Web server functions

The web server "Home" page provides access to the display, so as to carry out all the configuration operations in the same way as if working directly on the unit. In addition, there will be an immediate response from the unit on its display.

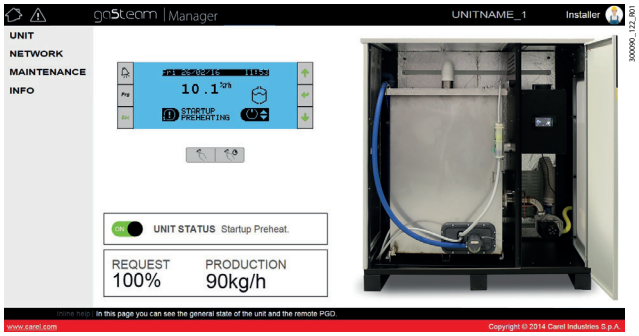

Fig. 14.p

The main menus are:
- UNIT
- NETWORK
- MAINTENANCE
- INFO

Unit menu

Probes: information and configuration of the main and limit probe. Select the type of signal and define the minimum and maximum values.

Wireless: enable and associate each wireless probe to the main probe group or limit probe group. Read the humidity and/or temperature, level and battery status.

Control: select the control type. Set the set point, differential, minimum and maximum. Configuration: set the time and date. Configure the main alarms and variation in percentages of fill and drain times.

Scheduler: enable and set the daily and weekly time bands.

Network menu

Display a summary of the status of the units in the advanced Main/Secondary system.

Maintenance

Timers: display boiler and unit operating hours. Display the time remaining until maintenance is required and set the maintenance pre-alert.

Logs: display the log of main variables (production, set point, drain pump status, fill valve status, request, unit status).

Live: real time display of the main variables (production, set point, drain pump status, fill valve status, request, unit status).

Info

Unit info: information on the unit model and software version. Select language and unit of measure.

Resources: useful links (Carel website, gaSteam manuals and pages on Carel website).

Guide & FAQ: general information on using the web server.

Notice: to avoid incorrect settings, some of the main unit operating parameters can only be modified via the web server when the unit is off (off from keypad).

15. SUPERVISOR NETWORK

15.1 Table of supervisor variables

The variables shown in the list are a set of all the internal variables on the gaSteam humidifier.
DO NOT CONFIGURE ANY VARIABLES THAT ARE NOT SHOWN IN THE TABLES, OTHERWISE HUMIDIFIER OPERATION MAY BE AFFECTED.

15.1.1 Table of Carel variables

The variables used for the Carel protocol are shown below.

RW= Read/Write

Type	Add.	Variable name	Description	Def.	Min	Max	UoM	Access
Analogue	1	ManReq	Set production request in manual mode				Percent	RW
Analogue	2	GlbSetP_Hum	Set humidity value (humidity set point)	50.0	0	100.0	PercentRelative Humidity	RW
Analogue	3	GlbSetP_Temp	Set temperature value (temperature set point)	42.0	0	100.0	DegreesCelsius	RW
Analogue	4	RegulationCfg.Hyst	Unit control parameters - Control hysteresis	2.0	0.5	100.0		RW
Analogue	5	RegulationCfg.Diff	Unit control parameters - Differential (for modulating control)	5.0				RW
Analogue	6	GlbSetPLim_Hum	Set humidity limit value (humidity limit set point)	100.0	0	100.0	PercentRelative Humidity	RW
Analogue	7	GlbSetPLim_Temp	Set temperature limit value (temperature limit set point)	50.0	0	100	DegreesCelsius	RW
Analogue	8	RegulationCfg.DiffLim	Unit control parameters - Limit differential (for modulating control)	5.0				RW
Analogue	9	RegulationCfg.MinReq	Unit control parameters - Minimum request	4.0	25.0	MaxUnit-Prod	Percent	RW
Analogue	10	AlrmThrshHumLo	Set main probe low humidity alarm threshold	0.0		AlrmThrsh-HumHi	PercentRelative Humidity	RW
Analogue	11	AlrmThrshHumHi	Set main probe high humidity alarm threshold	100.0	AlrmThrsh-HumLo		PercentRelative Humidity	RW
Analogue	12	AlrmThrshHumHiLim	Set limit probe low humidity alarm threshold	100.0	0	100.0	PercentRelative Humidity	RW
Analogue	13	AlrmThrshTempLo	Set main probe low temperature alarm threshold	0.0		AlrmThr-shTempHi	DegreesCelsius	RW
Analogue	14	AlrmThrshTempHi	Set main probe high temperature alarm threshold	60.0	AlrmThr-shTempLo		DegreesCelsius	RW
Analogue	15	AlrmThrshTempHiLim	Set limit probe low temperature alarm threshold	60.0			DegreesCelsius	RW
Analogue	16	MainPrbCfg.Mi_Hum	Main probe configuration - Minimum for humidity control	0	0	100	PercentRelative-Humidity	RW
Analogue	17	MainPrbCfg.Ma_Hum	Main probe configuration - Maximum for humidity control	100.0	0	100	PercentRelative-Humidity	RW
Analogue	18	MainPrbCfg.Mi_Temp	Main probe configuration - Minimum for temperature control	-20.0			DegreesCelsius	RW
Analogue	19	MainPrbCfg.Ma_Temp	Main probe configuration - Maximum for temperature control	70.0			DegreesCelsius	RW
Analogue	20	LimitPrbCfg.Mi_Hum	Limit probe configuration - Minimum for humidity control	0	0	100	PercentRelative-Humidity	RW
Analogue	21	LimitPrbCfg.Ma_Hum	Limit probe configuration - Maximum for humidity control	100.0	0	100	PercentRelative-Humidity	RW
Analogue	22	LimitPrbCfg.Mi_Temp	Limit probe configuration - Minimum for humidity control	-20.0			DegreesCelsius	RW
Analogue	23	LimitPrbCfg.Ma_Temp	Limit probe configuration - Maximum for temperature control	70.0			DegreesCelsius	RW
Analogue	24	RegulationCfg.PwrCor-rectionFactor	Unit control parameters - Correction factor (0=no correction)	29.0				RW
Analogue	25	SchedDayCfg[0].SetP	Scheduler - Set point for ON+SET mode (2) (Monday)					RW
Analogue	26	SchedDayCfg[1].SetP	Scheduler - Set point for ON+SET mode (2) (Tuesday)					RW
Analogue	27	SchedDayCfg[2].SetP	Scheduler - Set point for ON+SET mode (2) (Wednesday)					RW
Analogue	28	SchedDayCfg[3].SetP	Scheduler - Set point for ON+SET mode (2) (2) (Thursday)					RW
Analogue	29	SchedDayCfg[4].SetP	Scheduler - Set point for ON+SET mode (2) (2) (Friday)					RW
Analogue	30	SchedDayCfg[5].SetP	Scheduler - Set point for ON+SET mode (2) (Saturday)					RW
Analogue	31	Man_ProdReqM8	Manual production request					RW
Analogue	32	MainPrb	Main probe reading					RW
Analogue	33	LimitPrb	Limit probe reading					RW
Analogue	34	PreheatPrb	Preheating probe reading				DegreesCelsius	RW
Analogue	35	CurrProdPh	Current production		0	NomProd	KilogramsPerHour	RW
Analogue	36	NetReq	Total current production as a % (M/S mode only)				Percent	RW
Analogue	37	NetProd	Total current production in kg/h / lb/h (M/S mode only)				Kilograms	RW
Analogue	38	Burner_1_Tach	Fan 1 speed reading				Revolutions PerMinute	RW
Analogue	39	Burner_2_Tach	Fan 2 speed reading				Revolutions PerMinute	RW
Analogue	40	Burner_MB_3_Tach	Fan 3 speed reading				Revolutions PerMinute	RW
Analogue	41	Temp_Fumes_1	Flue gas temperature - Probe 1 reading				DegreesCelsius	RW
Analogue	42	Temp_Fumes_2	Flue gas temperature - Probe 2 reading				DegreesCelsius	RW
Analogue	43	Temp_Fumes_MB_3	Flue gas temperature - Probe 3 reading				DegreesCelsius	RW
Analogue	44	Fan1_PWM	Fan 1 speed set point		0.0	1000.0		RW
Analogue	45	Fan2_PWM	Fan 2 speed set point		0.0	1000.0		RW
Analogue	46	Fan3_PWM	Fan 3 speed set point		0	100.0		RW
Analogue	47	Fan1_SetSpeed	Fan 1 speed setting					RW
Analogue	48	Fan2_SetSpeed	Fan 2 speed setting					RW
Analogue	49	FoamLevReal	Signal reading from foam sensor					RW
Analogue	56	RegulationCfg.W_MinT-empThrsh	Set water preheating temperature	70.0	50.0	80.0	DegreesCelsius	RW
Analogue	57	PreheatOffset_Temp	Set temperature difference with reference to temperature set point for activation of preheating (preheating offset)	3.0	2	20.0	DegreesCelsius	RW

Type	Add.	Variable name	Description	Def.	Min	Max	UoM	Access
Analogue	58	PreheatOffset_Hum	Set humidity difference with reference to humidity set point for activation of preheating (preheating offset)	3.0	2	20.0	PercentRelative-Humidity	RW
Analogue	59	ManMode_Fan1_PWM	Fan 1 speed setting in manual mode		Fan_1_cfg. MinSpeed	Fan_1_cfg. MaxSpeed	RevolutionsPerM-inute	RW
Analogue	60	ManMode_Fan2_PWM	Fan 2 speed setting in manual mode		Fan_2_cfg. MinSpeed	Fan_2_cfg. MaxSpeed	Revolutions PerMinute	RW
Analogue	61	ManMode_Fan3_PWM	Fan 3 speed setting in manual mode		Fan_1_cfg. MinSpeed	Fan_1_cfg. MaxSpeed	Revolutions PerMinute	RW
Analogue	62	MaxUnitProd	Set maximum production value	100.0	Regulation-Cfg.MinReq	100.0	Percent	RW
Analogue	66	ProdReqMsk	Production request				Percent	RW
Analogue	67	ProdReqMsk_Secondary	Secondary unit production request				Percent	RW
Analogue	68	CurrProdPh_Secondary	Secondary unit current production		0	NomProd	KilogramsPerHour	RW
Analogue	69	PreheatPrb_Secondary	Secondary unit preheating probe reading				DegreesCelsius	RW
Boolean	1	OnBySV	Unit On/Off signal from supervisor					RW
Boolean	6	WHardnessTyp	Set water hardness management mode (0 = AUTO; 1 = MANUAL)	TRUE				RW
Boolean	7	SchedDayCfg[0].EnTB	Scheduler - Enable time band (Monday)					RW
Boolean	8	SchedDayCfg[1].EnTB	Scheduler - Enable time band (Tuesday)					RW
Boolean	9	SchedDayCfg[2].EnTB	Scheduler - Enable time band (Wednesday)					RW
Boolean	10	SchedDayCfg[3].EnTB	Scheduler - Enable time band (Thursday)					RW
Boolean	11	SchedDayCfg[4].EnTB	Scheduler - Enable time band (Friday)					RW
Boolean	12	SchedDayCfg[5].EnTB	Scheduler - Enable time band (Saturday)					RW
Boolean	13	ManExtFan	Blower command in manual mode (0=OFF, 1=ON)					RW
Boolean	16	ManFillPmpStatus_Sec-ondary	Secondary unit fill valve command in manual mode (0=OFF, 1=ON)					RW
Boolean	17	ManDrainPmpStatus_ Secondary	Secondary unit drain pump command in manual mode (0=OFF, 1=ON)					RW
Boolean	18	ManExtFan_Secondary	Secondary unit blower command in manual mode (0=OFF, 1=ON)					RW
Boolean	31	RemOn	Unit On/Off signal from digital input (ON = TRUE)					RW
Boolean	33	LevSenStatus.Low	Level sensor status - Low level					RW
Boolean	34	LevSenStatus.Hi	Level sensor status - High level					RW
Boolean	35	LevSenStatus.Foam	Level sensor status - Foam level					RW
Boolean	36	OnOffStatus	Unit On/Off status					RW
Boolean	37	PreMaintWarn	Next maintenance pre-alert					RW
Boolean	38	CurrBlkAlrm.IsBlocker	At least 1 non-resettable alarm active					RW
Boolean	39	CurrBlkAlrm.IsPresent	At least 1 alarm active					RW
Boolean	40	CurrBlkAlrm.Warning	At least 1 warning active					RW
Boolean	41	Alrm_Autotest.Active	Alarm ALC01: Autotest failed					RW
Boolean	42	Alrm_HighConductAl. Active	Alarm ALC02: High conductivity					RW
Boolean	43	Alrm_LevSen.Active	Alarm ALC03: Level sensor broken					RW
Boolean	44	Alrm_ThermPtc.Active	Alarm ALC04: High heater temperature					RW
Boolean	45	Alrm_WMiss.Active	Alarm ALB01: No water					RW
Boolean	46	Alrm_LowProd.Active	Alarm ALB02: Low production					RW
Boolean	47	Alrm_MainPrb.Active	Alarm ALA01: Main probe broken or disconnected					RW
Boolean	48	Alrm_LimPrb.Active	Alarm ALA02: Limit probe broken or disconnected					RW
Boolean	49	Alrm_PreHPrb.Active	Alarm ALA03: Preheating probe broken or disconnected					RW
Boolean	50	Alrm_HiHum.Active	Alarm ALH01: High humidity/temperature					RW
Boolean	51	Alrm_LoHum.Active	Alarm ALH02: Low humidity/temperature					RW
Boolean	52	Alrm_HiHum_Lim.Active	Alarm ALH03: High limit humidity/temperature					RW
Boolean	53	Alrm_Foam.Active	Alarm ALW01: Foam warning					RW
Boolean	54	Alrm_PeriodicMaint. Active	Alarm ALT01: Maintenance request					RW
Boolean	55	Alrm_CylFull.Active	Alarm ALW02: Cylinder full					RW
Boolean	56	Alrm_ConductPrb. Active	Alarm ALA04: Conductivity meter					RW
Boolean	57	Alrm_HighConductWr. Active	Warning ALW03: High conductivity					RW
Boolean	58	Alrm_RetMem.Active	Alarm ALR01: Retain memory					RW
Boolean	59	Warn_Autotest.Active	Warning ALW04: Autotest log only					RW
Boolean	60	Warn_LevSen.Active	Warning ALW05: Level sensor log only					RW
Boolean	61	Warn_LowProd.Active	Warning ALW06: Low production log only					RW
Boolean	62	Alrm_WirelessPrb_1_Of-fline.Active	Alarm ALP01: Wireless probe 1 offline					RW
Boolean	63	Alrm_WirelessPrb_2_Of-fline.Active	Alarm ALP02: Wireless probe 2 offline					RW
Boolean	64	Alrm_WirelessPrb_3_Of-fline.Active	Alarm ALP03: Wireless probe 3 offline					RW
Boolean	65	Alrm_WirelessPrb_4_Of-fline.Active	Alarm ALP04: Wireless probe 4 offline					RW
Boolean	66	Alrm_MissingModel. Active	Alarm ALM01: Model not set					RW
Boolean	67	Alrm_NetUnit_1.Active	Alarm ALN01: Problems on network unit 1					RW
Boolean	68	Alrm_NetUnit_2.Active	Alarm ALN02: Problems on network unit 2					RW
Boolean	69	Alrm_NetUnit_3.Active	Alarm ALN03: Problems on network unit 3					RW
Boolean	70	Alrm_NetUnit_4.Active	Alarm ALN04: Problems on network unit 4					RW
Boolean	71	Alrm_NetUnit_5.Active	Alarm ALN05: Problems on network unit 5					RW
Boolean	72	Alrm_NetUnit_6.Active	Alarm ALN06: Problems on network unit 6					RW
Boolean	73	Alrm_NetUnit_7.Active	Alarm ALN07: Problems on network unit 7					RW
Boolean	74	Alrm_NetUnit_8.Active	Alarm ALN08: Problems on network unit 8					RW
Boolean	75	Alrm_NetUnit_9.Active	Alarm ALN09: Problems on network unit 9					RW
Boolean	76	Alrm_NetUnit_10.Active	Alarm ALN10: Problems on network unit 10					RW
Boolean	77	Alrm_NetUnit_11.Active	Alarm ALN11: Problems on network unit 11					RW
Boolean	78	Alrm_NetUnit_12.Active	Alarm ALN12: Problems on network unit 12					RW
Boolean	79	Alrm_NetUnit_13.Active	Alarm ALN13: Problems on network unit 13					RW
Boolean	80	Alrm_NetUnit_14.Active	Alarm ALN14: Problems on network unit 14					RW
Boolean	81	Alrm_NetUnit_15.Active	Alarm ALN15: Problems on network unit 15					RW
Boolean	82	Alrm_NetUnit_16.Active	Alarm ALN16: Problems on network unit 16					RW

Type	Add.	Variable name	Description	Def.	Min	Max	UoM	Access
Boolean	83	Alrm_NetUnit_17.Active	Alarm ALN17: Problems on network unit 17					RW
Boolean	84	Alrm_NetUnit_18.Active	Alarm ALN18: Problems on network unit 18					RW
Boolean	85	Alrm_NetUnit_19.Active	Alarm ALN19: Problems on network unit 19					RW
Boolean	86	Alrm_NetUnit_20.Active	Alarm ALN20: Problems on network unit 20					RW
Boolean	87	Alrm_WirelessPrb_1_ LowBatt.Active	Alarm ALP05: Wireless probe 1 low battery					RW
Boolean	88	Alrm_WirelessPrb_2_ LowBatt.Active	Alarm ALP06: Wireless probe 2 low battery					RW
Boolean	89	Alrm_WirelessPrb_3_ LowBatt.Active	Alarm ALP07: Wireless probe 3 low battery					RW
Boolean	90	Alrm_WirelessPrb_4_ LowBatt.Active	Alarm ALP08: Wireless probe 4 low battery					RW
Boolean	91	Alrm_WirelessPrb_Main. Active	Alarm ALA05: Wireless main probe not available					RW
Boolean	92	Alrm_WirelessPrb_Limit. Active	Alarm ALA06: Wireless limit probe not available					RW
Boolean	101	Klixon_Fan_1	Flue gas Klixon safety thermostat status 1					RW
Boolean	102	Klixon_Fan_2	Flue gas Klixon safety thermostat status 2					RW
Boolean	103	Klixon_Fan_MB_3	Flue gas Klixon safety thermostat status 3					RW
Boolean	104	Flame_1_Present	Burner 1 flame presence status					RW
Boolean	105	Flame_2_Present	Burner 2 flame presence status					RW
Boolean	106	Flame_MB_3_Present	Burner 3 flame presence status					RW
Boolean	107	Burner1_GO	Burner 1 gas ignition command status					RW
Boolean	108	Burner2_GO	Burner 2 gas ignition command status					RW
Boolean	109	Burner3_GO	Burner 3 gas ignition command status					RW
Boolean	113	BackupHwReq	Hardware backup request					RW
Boolean	114	Alrm_Termic_Fan_1. Active	Alarm ALA07: Thermal protector 1 active					RW
Boolean	115	Alrm_Termic_Fan_2. Active	Alarm ALA08: Thermal protector 2 active					RW
Boolean	116	Alrm_Fumes_1_broke. Active	Alarm ALP10: Flue gas probe 1 broken					RW
Boolean	117	Alrm_Fumes_2_broke. Active	Alarm ALP11: Flue gas probe 2 broken					RW
Boolean	118	Alrm_warning_ fumes_1.Active	Warning ALP13: Flue gas 1					RW
Boolean	119	Alrm_warning_ fumes_2.Active	Warning ALP14: Flue gas 2					RW
Boolean	120	Alrm_fumes_1.Active	Alarm ALP16: Flue gas 1					RW
Boolean	121	Alrm_fumes_2.Active	Alarm ALP17: Flue gas 2					RW
Boolean	122	Alrm_Termic_Fan_3. Active	Alarm ALA09: Thermal protector 3 active					RW
Boolean	123	Alrm_Fumes_3_broke. Active	Alarm ALP12: Flue gas probe 3 broken					RW
Boolean	124	Alrm_fumes_3.Active	Alarm ALP18: Flue gas 3					RW
Boolean	125	Alrm_warning_ fumes_3.Active	Warning ALP15: Flue gas 3					RW
Boolean	126	Alrm_Fan_1.Active	Alarm ALA10: Fan 1					RW
Boolean	127	Alrm_Fan_2.Active	Alarm ALA11: Fan 2					RW
Boolean	128	Alrm_Fan_3.Active	Alarm ALA12: Fan 3					RW
Boolean	129	Al_AntiFreeze_1.Active	Alarm ALA13: Frost protection check components					RW
Boolean	130	Al_Secondary_450_Of-fLine.Active	Alarm ALA14: Secondary 450 online					RW
Boolean	131	Al_Main_450_OffLine. Active	Alarm ALA15: Main 450 offline					RW
Boolean	132	Al_AntiFreeze_2_Sec-ondary.Active	Alarm ALA17: Secondary frost protection					RW
Boolean	133	Al_Speed_Fault_Fan_1. Active	Alarm ALA20: Fan 1 speed error					RW
Boolean	134	Al_Speed_Fault_Fan_2. Active	Alarm ALA21: Fan 2 speed error					RW
Boolean	135	Al_Speed_Fault_Fan_3. Active	Alarm ALA22: Fan 3 speed error					RW
Boolean	136	Alrm_SVOffline.Active	Alarm ALP21: Supervisor offline					RW
Boolean	137	Alrm_MissingModel_S. Active	Alarm ALP24: No secondary model					RW
Boolean	138	Alrm_WMiss_S.Active	Alarm ALP25: Secondary no water					RW
Boolean	139	Alrm_Foam_S.Active	Alarm ALM21: Secondary foam warning					RW
Boolean	140	Alrm_LowProd_S.Active	Alarm ALB03: Secondary low production					RW
Boolean	141	Alrm_LevSen_S.Active	Alarm ALC05: Secondary level sensor broken					RW
Boolean	142	Alrm_Autotest_S.Active	Alarm ALC06: Secondary autotest failed					RW
Boolean	143	Alrm_CylFull_S.Active	Alarm ALW12: Secondary cylinder full alarm					RW
Boolean	144	Alrm_HighConductAl_S. Active	Alarm ALC07: Secondary high conductivity					RW
Boolean	145	Alrm_PreHPrb_S.Active	Alarm ALA18: Secondary preheating probe broken or disconnected					RW
Boolean	146	Alrm_ConductPrb_S. Active	Alarm ALA19: Secondary conductivity probe					RW
Boolean	147	Alrm_RetMem_S.Active	Alarm ALR02: Secondary retain memory					RW
Boolean	148	Warn_Autotest_S.Active	Warning ALW07: Secondary autotest					RW
Boolean	149	Warn_LevSen_S.Active	Warning ALW10: Secondary level sensor					RW
Boolean	150	Warn_LowProd_S.Active	Warning ALW11: Secondary low production					RW
Boolean	151	Al_AntiFreeze_2.Active	Alarm ALA16: Frost protection force preheating					RW
Boolean	152	EnHiConductAlrm	Enable high conductivity alarm	TRUE				RW
Boolean	153	ManDrain	Manual total drain command (1=startup; value changes from 1 to 0 when drain is complete)					RW
Boolean	154	ManDrain_Secondary	Secondary unit manual total drain command (1=startup; value changes from 1 to 0 when drain is complete)					RW
Boolean	155	EnPreheatOff	Enable preheating function (0=disabled, 1=enabled)	FALSE				RW
Boolean	156	EnPartFills	Enable micro-filling function to restore water level (0=disa-bled, 1=enabled)	FALSE				RW

Type	Add.	Variable name	Description	Def.	Min	Max	UoM	Access
Boolean	157	DilDrainCfg.Daily-Sched[1].Enable	Drain to dilute - Daily scheduler (Monday) - enable	TRUE				RW
Boolean	158	DilDrainCfg.Daily-Sched[2].Enable	Drain to dilute - Daily scheduler (Tuesday) - enable	TRUE				RW
Boolean	159	DilDrainCfg.Daily-Sched[3].Enable	Drain to dilute - Daily scheduler (Wednesday) - enable	TRUE				RW
Boolean	160	DilDrainCfg.Daily-Sched[4].Enable	Drain to dilute - Daily scheduler (Thursday) - enable	TRUE				RW
Boolean	161	DilDrainCfg.Daily-Sched[5].Enable	Drain to dilute - Daily scheduler (Friday) - enable	TRUE				RW
Boolean	162	DilDrainCfg.Daily-Sched[6].Enable	Drain to dilute - Daily scheduler (Saturday) - enable	FALSE				RW
Boolean	163	DilDrainCfg.Daily-Sched[7].Enable	Drain to dilute - Daily scheduler (Sunday) - enable	FALSE				RW
Boolean	164	EnPeriodicDrain	Enable periodic total drain (0=disabled, 1=enabled)	FALSE				RW
Boolean	165	UnitPause	Unit setting paused (0=not paused; 1=paused)					RW
Boolean	166	CylWorkHrRes_Sec-ondary	Secondary unit cylinder production hours reset command					RW
Boolean	167	DisableVarUnitPause	Disable pause from monitoring service (0: pause not disa-bled, 1: pause disabled)					RW
Boolean	171	EnManReq	Enable manual production request					RW
Boolean	172	Main_450	Main-Secondary 450 mode status (0 = NOT ACTIVE; 1 = ACTIVE)	FALSE				RW
Boolean	174	ManMode_Fan1	Fan 1 command in manual mode (0=OFF, 1=ON)					RW
Boolean	175	ManMode_Fan2	Fan 2 command in manual mode (0=OFF, 1=ON)					RW
Boolean	176	ManMode_Burner1	Burner 1 command in manual mode (0=OFF, 1=ON)					RW
Boolean	177	ManMode_Burner2	Burner 2 command in manual mode (0=OFF, 1=ON)					RW
Boolean	178	Man_DOutM5	Value of programmable digital output M5.2 (see DOutM-5Cfg)					RW
Boolean	179	Man_DOutM6	Value of programmable digital output M6 (see DOutM5Cfg)					RW
Boolean	180	Man_OnOffStatus	Unit manual On/Off command					RW
Boolean	182	ManMode_Burner3	Burner 3 command in manual mode (0=OFF, 1=ON)					RW
Boolean	183	ManMode_Fan3	Fan 3 command in manual mode (0=OFF, 1=ON)					RW
Boolean	186	CurrBlkAlrm_S_IsPresent	At least 1 alarm active, Secondary unit					RW
Boolean	187	CurrBlkAlrm_S_Warning	At least 1 warning active, Secondary unit					RW
Boolean	188	Alrm_HiBoilerTemp. Active	Alarm ALP09: High boiler temperature (>110°)					RW
Boolean	189	Al_AntiFreeze_1_Sec-ondary.Active	Alarm ALA23: Frost protection check components, Second-ary unit					RW
Integer	1	SV_PwrReq	Production request from supervisor		0.0	100.0	Percent	RW
Integer	2	ManMode_msk	Start manual mode (0=disabled; 1=outputs controlled manually, 2=production request set manually)	0				RW
Integer	3	RegulationCfg.RegTyp	Control mode (0 = External proportional signal; 1 = External proportional signal + limit; 2 = ON/OFF signal; 3 = Humidity (one probe); 4 = Temperature (one probe); 5 = Humidity + limit; 6 = Temperature + limit; 7 = Humidity (two probes); 8 = Temperature (two probes))	3				RW
Integer	4	ThrshAlrmDT	Delay for each humidity/temperature threshold alarm	60			Seconds	RW
Integer	5	MainPrbCfg.UITyp	Main probe configuration - Probe type	1				RW
Integer	6	LimitPrbCfg.UITyp	Limit probe configuration - Probe type	1	0	5		RW
Integer	7	WHardnessMan	Water hardness value setting, if manual mode (0=0-10°F; 1=10-20°F; 2=20-30°F; 3=30-40°F; 4=Demineralised water)			4		RW
Integer	8	EvapCycleNoThrsh	Set number of evaporation cycles for drain to dilute if micro-filling mode not active (0 =AUTO)	0		MaxEvap CycleNo		RW
Integer	9	FillTScale	Set additional filling time modification after reaching green LED level if micro-filling mode not active	100	20	100	Percent	RW
Integer	10	DilDrainTScale	Set drain time modification	100	5	190	Percent	RW
Integer	11	Scheduler.SchedDay-ToSet	Scheduler - Day to configure (a value > 0 enables editing mode)		1	7		RW
Integer	12	SchedDayCfg[0].StartHr	Scheduler - Time band start time (Monday)					RW
Integer	13	SchedDayCfg[0]. StartMin	Scheduler - Time band end time (Monday)					RW
Integer	14	SchedDayCfg[0]. WorkMode	Scheduler - Time band mode (0=OFF, 1=ON, 2=ON+SET) (Monday)					RW
Integer	15	SchedDayCfg[1].StartHr	Scheduler - Time band start time (Tuesday)					RW
Integer	16	SchedDayCfg[1]. StartMin	Scheduler - Time band end time (Tuesday)					RW
Integer	17	SchedDayCfg[1]. WorkMode	Scheduler - Time band mode (0=OFF, 1=ON, 2=ON+SET) (Tuesday)					RW
Integer	18	SchedDayCfg[2].StartHr	Scheduler - Time band start time (Wednesday)					RW
Integer	19	SchedDayCfg[2]. StartMin	Scheduler - Time band end time (Wednesday)					RW
Integer	20	SchedDayCfg[2]. WorkMode	Scheduler - Time band mode (0=OFF, 1=ON, 2=ON+SET) (Wednesday)					RW
Integer	21	SchedDayCfg[3].StartHr	Scheduler - Time band start time (Thursday)					RW
Integer	22	SchedDayCfg[3]. StartMin	Scheduler - Time band end time (Thursday)					RW
Integer	23	SchedDayCfg[3]. WorkMode	Scheduler - Time band mode (0=OFF, 1=ON, 2=ON+SET) (Thursday)					RW
Integer	24	SchedDayCfg[4].StartHr	Scheduler - Time band start time (Friday)					RW
Integer	25	SchedDayCfg[4]. StartMin	Scheduler - Time band end time (Friday)					RW
Integer	26	SchedDayCfg[4]. WorkMode	Scheduler - Time band mode (0=OFF, 1=ON, 2=ON+SET) (Friday)					RW
Integer	27	SchedDayCfg[5].StartHr	Scheduler - Time band start time (Saturday)					RW
Integer	28	SchedDayCfg[5]. StartMin	Scheduler - Time band end time (Saturday)					RW
Integer	29	SchedDayCfg[5]. WorkMode	Scheduler - Time band mode (0=OFF, 1=ON, 2=ON+SET) (Saturday)					RW
Integer	30	UoM	Unit of measure system (0 = not set, 1 = international system, 2 = imperial system)	1	1	2		RW
Integer	31	Year	Current year				Years	RW

Type	Add.	Variable name	Description	Def.	Min	Max	UoM	Access
Integer	32	Month	Current month				Months	RW
Integer	33	Day	Current day				Days	RW
Integer	34	Hour	Current time				Hours	RW
Integer	35	Minute	Current minute				Minutes	RW
Integer	36	SetTimezone	Time zone set	36		103		RW
Integer	37	SV_Command	Reset command (1=cancel alarms; 2=reset cylinder production hours, reset after 5 seconds)					RW
Integer	38	SV_SWVer	Software version					RW
Integer	39	SV_OSVer	Operating system version					RW
Integer	40	UnitModel	Unit model					RW
Integer	41	Conductivity_Calc	Inlet water conductivity reading		20	1509		RW
Integer	42	WirelessPrbVal_1.Hum	Wireless probe 1 - Humidity value in %rH (for SA and SI probes only)					RW
Integer	43	WirelessPrbVal_1.Temp	Wireless probe 1 - Temperature value in °C					RW
Integer	44	WirelessPrbInfo_1. BattLev	Wireless probe 1 - Battery level from 0 to 3600 mV (below 2800 mV the battery level is low)					RW
Integer	45	WirelessPrbInfo_1. RadioSignalLev	Wireless probe 1 - Radio signal level in dBm+100 (8-15 = LOW; 15-30 = MEDIUM, >30 = EXCELLENT)					RW
Integer	46	WirelessPrbVal_2.Hum	Wireless probe 2 - Humidity value in %rH (for SA and SI probes only)					RW
Integer	47	WirelessPrbVal_2.Temp	Wireless probe 2 - Temperature value in °C					RW
Integer	48	WirelessPrbInfo_2. BattLev	Wireless probe 2 - Battery level from 0 to 3600 mV (below 2800 mV the battery level is low)					RW
Integer	49	WirelessPrbInfo_2. RadioSignalLev	Wireless probe 2 - Radio signal level in dBm+100 (8-15 = LOW; 15-30 = MEDIUM, >30 = EXCELLENT)					RW
Integer	50	WirelessPrbVal_3.Hum	Wireless probe 3 - Humidity value in %rH (for SA and SI probes only)					RW
Integer	51	WirelessPrbVal_3.Temp	Wireless probe 3 - Temperature value in °C					RW
Integer	52	WirelessPrbInfo_3. BattLev	Wireless probe 3 - Battery level from 0 to 3600 mV (below 2800 mV the battery level is low)					RW
Integer	53	WirelessPrbInfo_3. RadioSignalLev	Wireless probe 3 - Radio signal level in dBm+100 (8-15 = LOW; 15-30 = MEDIUM, >30 = EXCELLENT)					RW
Integer	54	WirelessPrbVal_4.Hum	Wireless probe 4 - Humidity value in %rH (for SA and SI probes only)					RW
Integer	55	WirelessPrbVal_4.Temp	Wireless probe 4 - Temperature value in °C					RW
Integer	56	WirelessPrbInfo_4. BattLev	Wireless probe 4 - Battery level from 0 to 3600 mV (below 2800 mV the battery level is low)					RW
Integer	57	WirelessPrbInfo_4. RadioSignalLev	Wireless probe 4 - Radio signal level in dBm+100 (8-15 = LOW; 15-30 = MEDIUM, >30 = EXCELLENT)					RW
Integer	58	UnitStatus	Unit status *					RW
Integer	59	WorkHr	Total unit operating hours				Hours	RW
Integer	60	CylWorkHr	Cylinder production hours		0		Hours	RW
Integer	61	NetStatus[1]	Status of network unit 1 *					RW
Integer	62	NetStatus[2]	Status of network unit 2 *					RW
Integer	63	NetStatus[3]	Status of network unit 3 *					RW
Integer	64	NetStatus[4]	Status of network unit 4 *					RW
Integer	65	NetStatus[5]	Status of network unit 5 *					RW
Integer	66	NetStatus[6]	Status of network unit 6 *					RW
Integer	67	NetStatus[7]	Status of network unit 7 *					RW
Integer	68	NetStatus[8]	Status of network unit 8 *					RW
Integer	69	NetStatus[9]	Status of network unit 9 *					RW
Integer	70	NetStatus[10]	Status of network unit 10 *					RW
Integer	71	NetStatus[11]	Status of network unit 11 *					RW
Integer	72	NetStatus[12]	Status of network unit 12 *					RW
Integer	73	NetStatus[13]	Status of network unit 13 *					RW
Integer	74	NetStatus[14]	Status of network unit 14 *					RW
Integer	75	NetStatus[15]	Status of network unit 15 *					RW
Integer	76	NetStatus[16]	Status of network unit 16 *					RW
Integer	77	NetStatus[17]	Status of network unit 17 *					RW
Integer	78	NetStatus[18]	Status of network unit 18 *					RW
Integer	79	NetStatus[19]	Status of network unit 19 *					RW
Integer	80	NetStatus[20]	Status of network unit 20 *					RW
Integer	101	SV_CommandResult	Response to the cylinder production hours reset command (1=ok, 2=failed, 3=invalid command; reset after 5 seconds)					RW
Integer	103	Fan_1_cfg.FAN_STATUS	Status of fan 1 ***					RW
Integer	104	Fan_2_cfg.FAN_STATUS	Status of fan 2 ***					RW
Integer	108	Fan_3_STATUS	Status of fan 3 ***					RW
Integer	109	PreMaintWarnThrsh	Set next maintenance pre-alert time	240			Hours	RW
Integer	110	PreMaintWarnThrsh_ Secondary	Secondary unit next maintenance pre-alert time setting	240			Hours	RW
Integer	111	HiConductAlrmDlyT	Set high conductivity alarm delay	60			Minutes	RW
Integer	112	HiConductWarnThrsh	Set high conductivity warning threshold	1250	20	HiConduct-AlrmThrsh		RW
Integer	113	HiConductAlrmThrsh	Set high conductivity alarm threshold	1500	HiConduct WarnThrsh	1500		RW
Integer	114	HiConductWarnHyst	Set high conductivity warning threshold hysteresis	25				RW
Integer	115	FoamLevSetPScale	Foam sensor sensitivity (0%-200% - def. 100%)	100	0	250		RW
Integer	116	FoamLevSetPScale_Secondary	Secondary unit foam sensor sensitivity (0%-200% - def. 100%)	100	0	250		RW
Integer	117	PartFillsT	Set micro-fill cycle duration	5	1	199	Seconds	RW
Integer	118	PartFillsT_Secondary	Secondary unit micro-fill cycle duration setting	5	1	199	Seconds	RW
Integer	119	DilDrainCfg.Typ	Drain to dilute mode when micro-fill function active (0 = Disabled; 1 = Daily scheduler; 2 = Periodic)	2	0	2		RW
Integer	122	DilDrainCfg.Period-icDilDrainThrsh	Set number of production hours between two periodic drain to dilute cycles if micro-filling mode is active	10	1	24	Hours	RW
Integer	123	DilDrainCfg.Daily-Sched[1].Start_h	Drain to dilute - Daily scheduler (Monday) - hours	23	0	23	Hours	RW
Integer	124	DilDrainCfg.Daily-Sched[1].Start_min	Drain to dilute - Daily scheduler (Monday) - minutes	0	0	59	Minutes	RW

Type	Add.	Variable name	Description	Def.	Min	Max	UoM	Access
Integer	125	DilDrainCfg.Daily-Sched[2].Start_h	Drain to dilute - Daily scheduler (Tuesday) - hours	23	0	23	Hours	RW
Integer	126	DilDrainCfg.Daily-Sched[2].Start_min	Drain to dilute - Daily scheduler (Tuesday) - minutes	0	0	59	Minutes	RW
Integer	127	DilDrainCfg.Daily-Sched[3].Start_h	Drain to dilute - Daily scheduler (Wednesday) - hours	23	0	23	Hours	RW
Integer	128	DilDrainCfg.Daily-Sched[3].Start_min	Drain to dilute - Daily scheduler (Wednesday) - minutes	0	0	59	Minutes	RW
Integer	129	DilDrainCfg.Daily-Sched[4].Start_h	Drain to dilute - Daily scheduler (Thursday) - hours	23	0	23	Hours	RW
Integer	130	DilDrainCfg.Daily-Sched[4].Start_min	Drain to dilute - Daily scheduler (Thursday) - minutes	0	0	59	Minutes	RW
Integer	131	DilDrainCfg.Daily-Sched[5].Start_h	Drain to dilute - Daily scheduler (Friday) - hours	23	0	23	Hours	RW
Integer	132	DilDrainCfg.Daily-Sched[5].Start_min	Drain to dilute - Daily scheduler (Friday) - minutes	0	0	59	Minutes	RW
Integer	133	DilDrainCfg.Daily-Sched[6].Start_h	Drain to dilute - Daily scheduler (Saturday) - hours	23	0	23	Hours	RW
Integer	134	DilDrainCfg.Daily-Sched[6].Start_min	Drain to dilute - Daily scheduler (Saturday) - minutes	0	0	59	Minutes	RW
Integer	135	DilDrainCfg.Daily-Sched[7].Start_h	Drain to dilute - Daily scheduler (Sunday) - hours	23	0	23	Hours	RW
Integer	136	DilDrainCfg.Daily-Sched[7].Start_min	Drain to dilute - Daily scheduler (Sunday) - minutes	0	0	59	Minutes	RW
Integer	137	PeriodicDrainThrsh	Set number of production hours between two periodic total drain cycles	10	1	999	Hours	RW
Integer	138	ExtFanDTOn	Set start blower delay from start of production			600	Seconds	RW
Integer	139	ExtFanDTOff	Set stop blower delay from end of production	30	0	600	Seconds	RW
Integer	140	EvapCycleNoThrsh_S	Set number of evaporation cycles for drain to dilute if micro-filling mode not active (0 = AUTO) Secondary unit	0		MaxEvap CycleNo		RW
Integer	141	FillTScale_Secondary	Secondary unit additional filling time modification setting after reaching green LED level if micro-filling mode not active	100	20	100	Percent	RW
Integer	142	DilDrainTScale_Sec-ondary	Secondary unit drain time modification setting	100	5	190	Percent	RW
Integer	145	WorkHr_Secondary	Secondary unit total operating hours				Hours	RW
Integer	146	CylWorkHr_Secondary	Secondary unit cylinder production hours		0		Hours	RW
Integer	147	Fan_1_cfg.Hours_Count	Fan 1 operating hours				Hours	RW
Integer	148	WorkHrCntDwn	Time remaining until next maintenance (demineralised water)				Hours	RW
Integer	149	WorkHrCntDwn_120	Time remaining until next maintenance (mains water)				Hours	RW
Integer	154	CylResDate.Year	Cylinder production hours reset date - Year				Years	RW
Integer	155	CylResDate.Month	Cylinder production hours reset date - Month				Months	RW
Integer	156	CylResDate.Day	Cylinder production hours reset date - Day				Days	RW
Integer	157	CylResDate.Hour	Cylinder production hours reset date - Hours				Hours	RW
Integer	158	CylResDate.Minute	Cylinder production hours reset date - Minutes				Minutes	RW
Integer	159	CylResDate_S.Year	Secondary unit cylinder production hours reset date - Year				Years	RW
Integer	160	CylResDate_S.Month	Secondary unit cylinder production hours reset date - Month				Months	RW
Integer	161	CylResDate_S.Day	Secondary unit cylinder production hours reset date - Day				Days	RW
Integer	162	CylResDate_S.Hour	Secondary unit cylinder production hours reset date - Hours				Hours	RW
Integer	163	CylResDate_S.Minute	Secondary unit cylinder production hours reset date - Minutes				Minutes	RW
Integer	164	ID_Lang	Current user interface language (0 = English; 1 = Italian; 2 = French; 3 = German; 4 = Spanish)	-1				RW
Integer	165	WorkHrCntDwn_Sec-ondary	Time remaining until next maintenance (demineralised water), Secondary				Hours	RW
Integer	166	WorkHrCntDwn_120_ Secondary	Time remaining until next maintenance (mains water), Secondary				Hours	RW
Integer	167	UnitStatus_Secondary	Secondary unit status *					RW
Integer	171	Fan_2_cfg.Hours_Count	Fan 2 operating hours				Hours	RW
Integer	172	Fan_3_cfg.Hours_Count	Fan 3 operating hours				Hours	RW
Integer	179	OSVersion[1]	Operating system version (major release)					RW
Integer	182	Conductivity_Secondary	Secondary unit inlet water conductivity reading +D331:D352		20	1509		RW

Tab. 15.b

* (0 = standby, 1 = production, 2 = alarm, 3 = off from BMS, 4 = off from scheduler, 5 = off from din, 6 = off from display, 7 = ready for backup, 8 = manual mode, 9 = warning, 10 = preheat, 11 = start preheat, 12 = autotest, 13 = manual drain, 14 = thermal shock, 15 = inactivity drain, 16 = foam drain, 17 = heaters off, 18 = awaiting fill, 19 = periodic drain, 20 = pre-purge, 21 = frost prot., 22 = calibration, 23 = ignition 24 = off from monitoring)

** (0 = startup; 10 = init; 20 = autotest 1; 30 = autotest 2; 40 = autotest 2 wait; 50 = autotest 3; 60 = autotest 4; 70 = standby; 80 = production; 90 = fill; 100 = drain; 110 = foam drain; 120 = shutdown alarm; 130 = alarm; 140 = special drain; 150 = manual mode; 160 = init. fill; 170 = fill; 180 = autotest r start; 190 = thermal shock drain; 200 = thermal shock fill; 210 = autotest r start.; 220 = autotest r init.; 230 = autotest r init. drain; 240 = autotest r stop init. drain; 250 = autotest r fill 1; 260 = autotest r fill 2; 270 = autotest r awaiting; 280 = autotest r drain 1; 290 = autotest r drain 2; 300 = autotest r end; 310 = defaults)

*** (1 = running; 2 = pre-purge; 3 = manual; 4 = alarm 5 = calibration; 6 = off; 7 = startup pre-purge; 8 = starting)

15.1.2 Table of Modbus variables

The variables used for the Modbus protocol are shown below

Type	Add.	Occ.	Variable name	Description	Def.	Min	Max	UoM	RW= Read/Write Access
Coil	1	1	OnBySV	Unit On/Off signal from supervisor					RW
Coil	6	1	WHardnessTyp	Set water hardness management mode (0 = AUTO; 1 = MANUAL)	TRUE				RW
Coil	7	1	SchedDayCfg[0].EnTB	Scheduler - Enable time band (Monday)					RW
Coil	8	1	SchedDayCfg[1].EnTB	Scheduler - Enable time band (Tuesday)					RW
Coil	9	1	SchedDayCfg[2].EnTB	Scheduler - Enable time band (Wednesday)					RW
Coil	10	1	SchedDayCfg[3].EnTB	Scheduler - Enable time band (Thursday)					RW
Coil	11	1	SchedDayCfg[4].EnTB	Scheduler - Enable time band (Friday)					RW
Coil	12	1	SchedDayCfg[5].EnTB	Scheduler - Enable time band (Saturday)					RW
Coil	13	1	ManExtFan	Blower command in manual mode (0=OFF, 1=ON)					RW
Coil	16	1	ManFillPmpStatus_Secondary	Secondary unit fill valve command in manual mode (0=OFF, 1=ON)					RW
Coil	17	1	ManDrainPmpStatus_Secondary	Secondary unit drain pump command in manual mode (0=OFF, 1=ON)					RW
Coil	18	1	ManExtFan_Secondary	Secondary unit blower command in manual mode (0=OFF, 1=ON)					RW
Coil	19	1	EnHiConductAlrm	Enable high conductivity alarm	TRUE				RW
Coil	20	1	ManDrain	Manual total drain command (1=startup; value changes from 1 to 0 when drain is complete)					RW
Coil	21	1	ManDrain_Secondary	Secondary unit manual total drain command (1=startup; value changes from 1 to 0 when drain is complete)					RW
Coil	22	1	EnPreheatOff	Enable preheating function (0=disabled, 1=enabled)	FALSE				RW
Coil	23	1	EnPartFills	Enable micro-filling function to restore water level (0=disabled, 1=enabled)	FALSE				RW
Coil	24	1	DilDrainCfg.DailySched[1].Enable	Drain to dilute - Daily scheduler (Monday) - enable	TRUE				RW
Coil	25	1	DilDrainCfg.DailySched[2].Enable	Drain to dilute - Daily scheduler (Tuesday) - enable	TRUE				RW
Coil	26	1	DilDrainCfg.DailySched[3].Enable	Drain to dilute - Daily scheduler (Wednesday) - enable	TRUE				RW
Coil	27	1	DilDrainCfg.DailySched[4].Enable	Drain to dilute - Daily scheduler (Thursday) - enable	TRUE				RW
Coil	28	1	DilDrainCfg.DailySched[5].Enable	Drain to dilute - Daily scheduler (Friday) - enable	TRUE				RW
Coil	29	1	DilDrainCfg.DailySched[6].Enable	Drain to dilute - Daily scheduler (Saturday) - enable	FALSE				RW
Coil	30	1	DilDrainCfg.DailySched[7].Enable	Drain to dilute - Daily scheduler (Sunday) - enable	FALSE				RW
Coil	31	1	EnPeriodicDrain	Enable periodic total drain (0=disabled, 1=enabled)	FALSE				RW
Coil	32	1	UnitPause	Unit setting paused (0=not paused; 1=paused)					RW
Coil	33	1	CylWorkHrRes_Secondary	Secondary unit cylinder production hours reset command					RW
Coil	34	1	ManMode_Fan3	Fan 3 command in manual mode (0=OFF, 1=ON)					RW
Coil	35	1	ManMode_Burner3	Burner 3 command in manual mode (0=OFF, 1=ON)					RW
Coil	301	1	ManMode_Fan1	Fan 1 command in manual mode (0=OFF, 1=ON)					RW
Coil	302	1	ManMode_Fan2	Fan 2 command in manual mode (0=OFF, 1=ON)					RW
Coil	303	1	ManMode_Burner1	Burner 1 command in manual mode (0=OFF, 1=ON)					RW
Coil	304	1	ManMode_Burner2	Burner 2 command in manual mode (0=OFF, 1=ON)					RW
Coil	305	1	Man_DOutM5	Value of programmable digital output M5.2 (see DOutM5Cfg)					RW
Coil	306	1	Man_DOutM6	Value of programmable digital output M6 (see DOutM5Cfg)					RW
Coil	307	1	Man_OnOffStatus	Unit manual On/Off command					RW
DiscreteInput	1	1	RemOn	Unit On/Off signal from digital input (ON = TRUE)					RW
DiscreteInput	3	1	LevSenStatus.Low	Level sensor status - Low level					RW
DiscreteInput	4	1	LevSenStatus.Hi	Level sensor status - High level					RW
DiscreteInput	5	1	LevSenStatus.Foam	Level sensor status - Foam level					RW
DiscreteInput	6	1	OnOffStatus	Unit On/Off status					RW
DiscreteInput	7	1	PreMaintWarn	Next maintenance pre-alert					RW
DiscreteInput	8	1	CurrBlkAlrm.IsBlocker	At least 1 non-resettable alarm active					RW
DiscreteInput	9	1	CurrBlkAlrm.IsPresent	At least 1 alarm active					RW
DiscreteInput	10	1	CurrBlkAlrm.Warning	At least 1 warning active					RW
DiscreteInput	11	1	Alrm_Autotest.Active	Alarm ALC01: Autotest failed					RW
DiscreteInput	12	1	Alrm_HighConductAl.Active	Alarm ALC02: High conductivity					RW
DiscreteInput	13	1	Alrm_LevSen.Active	Alarm ALC03: Level sensor broken					RW
DiscreteInput	14	1	Alrm_ThermPtc.Active	Alarm ALC04: High heater temperature					RW
DiscreteInput	15	1	Alrm_WMiss.Active	Alarm ALB01: No water					RW
DiscreteInput	16	1	Alrm_LowProd.Active	Alarm ALB02: Low production					RW
DiscreteInput	17	1	Alrm_MainPrb.Active	Alarm ALA01: Main probe broken or disconnected					RW
DiscreteInput	18	1	Alrm_LimPrb.Active	Alarm ALA02: Limit probe broken or disconnected					RW
DiscreteInput	19	1	Alrm_PreHPrb.Active	Alarm ALA03: Preheating probe broken or disconnected					RW
DiscreteInput	20	1	Alrm_HiHum.Active	Alarm ALH01: High humidity/temperature					RW
DiscreteInput	21	1	Alrm_LoHum.Active	Alarm ALH02: Low humidity/temperature					RW
DiscreteInput	22	1	Alrm_HiHum_Lim.Active	Alarm ALH03: High limit humidity/temperature					RW
DiscreteInput	23	1	Alrm_Foam.Active	Alarm ALW01: Foam warning					RW
DiscreteInput	24	1	Alrm_PeriodicMaint.Active	Alarm ALT01: Maintenance request					RW

Type	Add.	Occ.	Variable name	Description	Def.	Min	Max	UoM	Access
DiscreteInput	25	1	Alrm_CylFull.Active	Alarm ALW02: Cylinder full					RW
DiscreteInput	26	1	Alrm_ConductPrb.Active	Alarm ALA04: Conductivity meter					RW
DiscreteInput	27	1	Alrm_HighConductWr.Active	Warning ALW03: High conductivity					RW
DiscreteInput	28	1	Alrm_RetMem.Active	Alarm ALR01: Retain memory					RW
DiscreteInput	29	1	Warn_Autotest.Active	Warning ALW04: Autotest log only					RW
DiscreteInput	30	1	Warn_LevSen.Active	Warning ALW05: Level sensor log only					RW
DiscreteInput	31	1	Warn_LowProd.Active	Warning ALW06: Low production log only					RW
DiscreteInput	32	1	Alrm_WirelessPrb_1_Offline. Active	Alarm ALP01: Wireless probe 1 offline					RW
DiscreteInput	33	1	Alrm_WirelessPrb_2_Offline. Active	Alarm ALP02: Wireless probe 2 offline					RW
DiscreteInput	34	1	Alrm_WirelessPrb_3_Offline. Active	Alarm ALP03: Wireless probe 3 offline					RW
DiscreteInput	35	1	Alrm_WirelessPrb_4_Offline. Active	Alarm ALP04: Wireless probe 4 offline					RW
DiscreteInput	36	1	Alrm_MissingModel.Active	Alarm ALM01: Model not set					RW
DiscreteInput	37	1	Alrm_NetUnit_1.Active	Alarm ALN01: Problems on network unit 1					RW
DiscreteInput	38	1	Alrm_NetUnit_2.Active	Alarm ALN02: Problems on network unit 2					RW
DiscreteInput	39	1	Alrm_NetUnit_3.Active	Alarm ALN03: Problems on network unit 3					RW
DiscreteInput	40	1	Alrm_NetUnit_4.Active	Alarm ALN04: Problems on network unit 4					RW
DiscreteInput	41	1	Alrm_NetUnit_5.Active	Alarm ALN05: Problems on network unit 5					RW
DiscreteInput	42	1	Alrm_NetUnit_6.Active	Alarm ALN06: Problems on network unit 6					RW
DiscreteInput	43	1	Alrm_NetUnit_7.Active	Alarm ALN07: Problems on network unit 7					RW
DiscreteInput	44	1	Alrm_NetUnit_8.Active	Alarm ALN08: Problems on network unit 8					RW
DiscreteInput	45	1	Alrm_NetUnit_9.Active	Alarm ALN09: Problems on network unit 9					RW
DiscreteInput	46	1	Alrm_NetUnit_10.Active	Alarm ALN10: Problems on network unit 10					RW
DiscreteInput	47	1	Alrm_NetUnit_11.Active	Alarm ALN11: Problems on network unit 11					RW
DiscreteInput	48	1	Alrm_NetUnit_12.Active	Alarm ALN12: Problems on network unit 12					RW
DiscreteInput	49	1	Alrm_NetUnit_13.Active	Alarm ALN13: Problems on network unit 13					RW
DiscreteInput	50	1	Alrm_NetUnit_14.Active	Alarm ALN14: Problems on network unit 14					RW
DiscreteInput	51	1	Alrm_NetUnit_15.Active	Alarm ALN15: Problems on network unit 15					RW
DiscreteInput	52	1	Alrm_NetUnit_16.Active	Alarm ALN16: Problems on network unit 16					RW
DiscreteInput	53	1	Alrm_NetUnit_17.Active	Alarm ALN17: Problems on network unit 17					RW
DiscreteInput	54	1	Alrm_NetUnit_18.Active	Alarm ALN18: Problems on network unit 18					RW
DiscreteInput	55	1	Alrm_NetUnit_19.Active	Alarm ALN19: Problems on network unit 19					RW
DiscreteInput	56	1	Alrm_NetUnit_20.Active	Alarm ALN20: Problems on network unit 20					RW
DiscreteInput	57	1	Alrm_WirelessPrb_1_Low-Batt.Active	Alarm ALP05: Wireless probe 1 low battery					RW
DiscreteInput	58	1	Alrm_WirelessPrb_2_Low-Batt.Active	Alarm ALP06: Wireless probe 2 low battery					RW
DiscreteInput	59	1	Alrm_WirelessPrb_3_Low-Batt.Active	Alarm ALP07: Wireless probe 3 low battery					RW
DiscreteInput	60	1	Alrm_WirelessPrb_4_Low-Batt.Active	Alarm ALP08: Wireless probe 4 low battery					RW
DiscreteInput	61	1	Alrm_WirelessPrb_Main. Active	Alarm ALA05: Wireless main probe not available					RW
DiscreteInput	62	1	Alrm_WirelessPrb_Limit. Active	Alarm ALA06: Wireless limit probe not available					RW
DiscreteInput	71	1	Klixon_Fan_1	Flue gas Klixon safety thermostat status 1					RW
DiscreteInput	72	1	Klixon_Fan_2	Flue gas Klixon safety thermostat status 2					RW
DiscreteInput	73	1	Klixon_Fan_MB_3	Flue gas Klixon safety thermostat status 3					RW
DiscreteInput	74	1	Flame_1_Present	Burner 1 flame presence status					RW
DiscreteInput	75	1	Flame_2_Present	Burner 2 flame presence status					RW
DiscreteInput	76	1	Flame_MB_3_Present	Burner 3 flame presence status					RW
DiscreteInput	77	1	Burner1_GO	Burner 1 gas ignition command status					RW
DiscreteInput	78	1	Burner2_GO	Burner 2 gas ignition command status					RW
DiscreteInput	79	1	Burner3_GO	Burner 3 gas ignition command status					RW
DiscreteInput	83	1	BackupHwReq	Hardware backup request					RW
DiscreteInput	84	1	Alrm_Termic_Fan_1.Active	Alarm ALA07: Thermal protector 1 active					RW
DiscreteInput	85	1	Alrm_Termic_Fan_2.Active	Alarm ALA08: Thermal protector 2 active					RW
DiscreteInput	86	1	Alrm_Fumes_1_broke.Active	Alarm ALP10: Flue gas probe 1 broken					RW
DiscreteInput	87	1	Alrm_Fumes_2_broke.Active	Alarm ALP11: Flue gas probe 2 broken					RW
DiscreteInput	88	1	Alrm_warning_fumes_1. Active	Warning ALP13: Flue gas 1					RW
DiscreteInput	89	1	Alrm_warning_fumes_2. Active	Warning ALP14: Flue gas 2					RW
DiscreteInput	90	1	Alrm_fumes_1.Active	Alarm ALP16: Flue gas 1					RW
DiscreteInput	91	1	Alrm_fumes_2.Active	Alarm ALP17: Flue gas 2					RW
DiscreteInput	92	1	Alrm_Termic_Fan_3.Active	Alarm ALA09: Thermal protector 3 active					RW
DiscreteInput	93	1	Alrm_Fumes_3_broke.Active	Alarm ALP12: Flue gas probe 3 broken					RW
DiscreteInput	94	1	Alrm_fumes_3.Active	Alarm ALP18: Flue gas 3					RW
DiscreteInput	95	1	Alrm_warning_fumes_3. Active	Warning ALP15: Flue gas 3					RW
DiscreteInput	96	1	Alrm_Fan_1.Active	Alarm ALA10: Fan 1					RW
DiscreteInput	97	1	Alrm_Fan_2.Active	Alarm ALA11: Fan 2					RW
DiscreteInput	98	1	Alrm_Fan_3.Active	Alarm ALA12: Fan 3					RW
DiscreteInput	99	1	Al_AntiFreeze_1.Active	Alarm ALA13: Frost protection check compo-nents					RW
DiscreteInput	100	1	Al_Secondary_450_OffLine. Active	Alarm ALA14: Secondary 450 online					RW
DiscreteInput	101	1	Al_Main_450_OffLine.Active	Alarm ALA15: Main 450 offline					RW
DiscreteInput	102	1	Al_AntiFreeze_2_Secondary. Active	Alarm ALA17: Secondary frost protection					RW
DiscreteInput	103	1	Al_Speed_Fault_Fan_1. Active	Alarm ALA20: Fan 1 speed error					RW
DiscreteInput	104	1	Al_Speed_Fault_Fan_2. Active	Alarm ALA21: Fan 2 speed error					RW
DiscreteInput	105	1	Al_Speed_Fault_Fan_3. Active	Alarm ALA22: Fan 3 speed error					RW
DiscreteInput	106	1	Alrm_SVOffline.Active	Alarm ALP21: Supervisor offline					RW

Type	Add.	Occ.	Variable name	Description	Def.	Min	Max	UoM	Access
DiscreteInput	107	1	Alrm_MissingModel_S.Active	Alarm ALP24: No secondary model					RW
DiscreteInput	108	1	Alrm_WMiss_S.Active	Alarm ALP25: Secondary no water					RW
DiscreteInput	109	1	Alrm_Foam_S.Active	Alarm ALM21: Secondary foam warning					RW
DiscreteInput	110	1	Alrm_LowProd_S.Active	Alarm ALB03: Secondary low production					RW
DiscreteInput	111	1	Alrm_LevSen_S.Active	Alarm ALC05: Secondary level sensor broken					RW
DiscreteInput	112	1	Alrm_Autotest_S.Active	Alarm ALC06: Secondary autotest failed					RW
DiscreteInput	113	1	Alrm_CylFull_S.Active	Alarm ALW12: Secondary cylinder full alarm					RW
DiscreteInput	114	1	Alrm_HighConductAl_S. Active	Alarm ALC07: Secondary high conductivity					RW
DiscreteInput	115	1	Alrm_PreHPrb_S.Active	Alarm ALA18: Secondary preheating probe broken or disconnected					RW
DiscreteInput	116	1	Alrm_ConductPrb_S.Active	Alarm ALA19: Secondary conductivity probe					RW
DiscreteInput	117	1	Alrm_RetMem_S.Active	Alarm ALR02: Secondary retain memory					RW
DiscreteInput	118	1	Warn_Autotest_S.Active	Warning ALW07: Secondary autotest					RW
DiscreteInput	119	1	Warn_LevSen_S.Active	Warning ALW10: Secondary level sensor					RW
DiscreteInput	120	1	Warn_LowProd_S.Active	Warning ALW11: Secondary low production					RW
DiscreteInput	121	1	Al_AntiFreeze_2.Active	Alarm ALA16: Frost protection force preheating					RW
DiscreteInput	122	1	DisableVarUnitPause	Disable pause from monitoring service (0: pause not disabled, 1: pause disabled)					RW
DiscreteInput	126	1	EnManReq	Enable manual production request					RW
DiscreteInput	127	1	Main_450	Main-Secondary 450 mode status (0 = NOT ACTIVE; 1 = ACTIVE)	FALSE				RW
DiscreteInput	128	1	CurrBlkAlrm_S_IsPresent	At least 1 alarm active, Secondary unit					RW
DiscreteInput	129	1	CurrBlkAlrm_S_Warning	At least 1 warning active, Secondary unit					RW
DiscreteInput	130	1	Alrm_HiBoilerTemp.Active	Alarm ALP09: High boiler temperature (>110°)					RW
DiscreteInput	131	1	Al_AntiFreeze_1_Secondary. Active	Alarm ALA23: Frost protection check components, Secondary unit					RW
HoldingRegister	1	1	SV_PwrReq	Production request from supervisor		0.0	100.0	0.1[%]	RW
HoldingRegister	3	1	ManMode_msk	Start manual mode (0=disabled; 1=outputs controlled manually, 2=production request set manually)	0	0	2		RW
HoldingRegister	6	2	ManReq	Set production request in manual mode		0.0	100.0	0.1[%]	RW
HoldingRegister	8	1	RegulationCfg.RegTyp	Control mode (0 = External proportional signal; 1 = External proportional signal + limit; 2 = ON/OFF signal; 3 = Humidity (one probe); 4 = Temperature (one probe); 5 = Humidity + limit; 6 = Temperature + limit; 7 = Humidity (two probes); 8 = Temperature (two probes))	3	0	8		RW
HoldingRegister	9	2	GlbSetP_Hum	Set humidity value (humidity set point)	50.0	0	100.0	0.1[%rH]	RW
HoldingRegister	11	2	GlbSetP_Temp	Set temperature value (temperature set point)	42.0	0	100.0	0.1[°C]/[°F]	RW
HoldingRegister	13	2	RegulationCfg.Hyst	Unit control parameters - Control hysteresis	5.0	0.5	100.0		RW
HoldingRegister	15	2	RegulationCfg.Diff	Unit control parameters - Differential (for modulating control)	5.0	2.0	999.9		RW
HoldingRegister	17	2	GlbSetPLim_Hum	Set humidity limit value (humidity limit set point)	100.0	0	100.0	0.1[%rH]	RW
HoldingRegister	19	2	GlbSetPLim_Temp	Set temperature limit value (temperature limit set point)	50.0	0	100	[°C]/[°F]	RW
HoldingRegister	21	2	RegulationCfg.DiffLim	Unit control parameters - Differential limit (for modulating control)	5.0	2.0	999.9		RW
HoldingRegister	23	2	RegulationCfg.MinReq	Unit control parameters - Minimum request	25.0	25.0	MaxUnit-Prod	0.1[%]	RW
HoldingRegister	25	2	AlrmThrshHumLo	Set main probe low humidity alarm threshold	0.0	0.0	AlrmThr-shHumHi	0.1[%rH]	RW
HoldingRegister	27	2	AlrmThrshHumHi	Set main probe high humidity alarm threshold	100.0	AlrmThrsh-HumLo		0.1[%rH]	RW
HoldingRegister	29	2	AlrmThrshHumHiLim	Set limit probe low humidity alarm threshold	100.0	0	100.0	0.1[%rH]	RW
HoldingRegister	31	2	AlrmThrshTempLo	Set main probe low temperature alarm threshold	0.0	0.0	AlrmThr-shTempHi	0.1[°C]/[°F]	RW
HoldingRegister	33	2	AlrmThrshTempHi	Set main probe high temperature alarm threshold	60.0	AlrmThr-shTempLo		0.1[°C]/[°F]	RW
HoldingRegister	35	2	AlrmThrshTempHiLim	Set limit probe low temperature alarm threshold	60.0	0.0	100.0	0.1[°C]/[°F]	RW
HoldingRegister	37	1	ThrshAlrmDT	Delay for each humidity/temperature threshold alarm	60			[s]	RW
HoldingRegister	38	1	MainPrbCfg.UITyp	Main probe configuration - Probe type	1	0	4		RW
HoldingRegister	39	2	MainPrbCfg.Mi_Hum	Main probe configuration - Minimum for humidity control	Period-icDrain-Thrsh	0	100	[%rH]	RW
HoldingRegister	41	2	MainPrbCfg.Ma_Hum	Main probe configuration - Maximum for humidity control	100.0	0	100	[%rH]	RW
HoldingRegister	43	2	MainPrbCfg.Mi_Temp	Main probe configuration - Minimum for humidity control	-20.0			0.1 [°C]/[°F]	RW
HoldingRegister	45	2	MainPrbCfg.Ma_Temp	Main probe configuration - Maximum for temperature control	70.0			0.1 [°C]/[°F]	RW
HoldingRegister	47	1	LimitPrbCfg.UITyp	Limit probe configuration - Probe type	1	0	5		RW
HoldingRegister	48	2	LimitPrbCfg.Mi_Hum	Limit probe configuration - Minimum for humidity control	0	0	100	[%rH]	RW
HoldingRegister	50	2	LimitPrbCfg.Ma_Hum	Limit probe configuration - Maximum for of humidity control	100.0	0	100	[%rH]	RW
HoldingRegister	52	2	LimitPrbCfg.Mi_Temp	Limit probe configuration - Minimum for humidity control	-20.0	-999.9	999.9	0.1[°C]/[°F]	RW
HoldingRegister	54	2	LimitPrbCfg.Ma_Temp	Limit probe configuration - Maximum for temperature control	70.0	-999.9	999.9	0.1[°C]/[°F]	RW
HoldingRegister	56	1	WHardnessMan	Water hardness value setting, if manual mode (0=0-10°F; 1=10-20°F; 2=20-30°F; 3=30-40°F; 4=Demineralised water)		0	4		RW
HoldingRegister	57	1	EvapCycleNoThrsh	Set number of evaporation cycles for drain to dilute if micro-filling mode not active (0=AUTO)	0	0	MaxEvap-CycleNo		RW
HoldingRegister	58	1	FillTScale	Set additional filling time modification after reaching green LED level if micro-filling mode not active	100	20	100	[%]	RW
HoldingRegister	59	1	DilDrainTScale	Set drain time modification	100	5	190	[%]	RW

Type	Add.	Occ.	Variable name	Description	Def.	Min	Max	UoM	Access
HoldingRegister	60	2	RegulationCfg.PwrCorrectionFactor	Unit control parameters - Correction factor (0 = no correction)	29.0	0.0	50.0		RW
HoldingRegister	62	1	Scheduler.SchedDayToSet	Scheduler - Day to configure (a value > 0 enables editing mode)		1	7		RW
HoldingRegister	63	1	SchedDayCfg[0].StartHr	Scheduler - Time band start time (Monday)		0	23		RW
HoldingRegister	64	1	SchedDayCfg[0].StartMin	Scheduler - Time band end time (Monday)		0	59		RW
HoldingRegister	65	1	SchedDayCfg[0].WorkMode	Scheduler - Time band mode (0=OFF, 1=ON, 2=ON+SET) (Monday)		0	Scheduler.SchedT-BMod-eUpLim		RW
HoldingRegister	66	2	SchedDayCfg[0].SetP	Scheduler - Set point for ON+SET mode (2) (Monday)		0.0	100.0		RW
HoldingRegister	68	1	SchedDayCfg[1].StartHr	Scheduler - Time band start time (Tuesday)		0	23		RW
HoldingRegister	69	1	SchedDayCfg[1].StartMin	Scheduler - Time band end time (Tuesday)		0	59		RW
HoldingRegister	70	1	SchedDayCfg[1].WorkMode	Scheduler - Time band mode (0=OFF, 1=ON, 2=ON+SET) (Tuesday)		0	Scheduler.SchedT-BMod-eUpLim		RW
HoldingRegister	71	2	SchedDayCfg[1].SetP	Scheduler - Set point for ON+SET mode (2) (Tuesday)		0.0	100.0		RW
HoldingRegister	73	1	SchedDayCfg[2].StartHr	Scheduler - Time band start time (Wednesday)		0	23		RW
HoldingRegister	74	1	SchedDayCfg[2].StartMin	Scheduler - Time band end time (Wednesday)		0	59		RW
HoldingRegister	75	1	SchedDayCfg[2].WorkMode	Scheduler - Time band mode (0=OFF, 1=ON, 2=ON+SET) (Wednesday)		0	Scheduler.SchedT-BMod-eUpLim		RW
HoldingRegister	76	2	SchedDayCfg[2].SetP	Scheduler - Set point for ON+SET mode (2) (Wednesday)		0.0	100.0		RW
HoldingRegister	78	1	SchedDayCfg[3].StartHr	Scheduler - Time band start time (Thursday)		0	23		RW
HoldingRegister	79	1	SchedDayCfg[3].StartMin	Scheduler - Time band end time (Thursday)		0	59		RW
HoldingRegister	80	1	SchedDayCfg[3].WorkMode	Scheduler - Time band mode (0=OFF, 1=ON, 2=ON+SET) (Thursday)		0	Scheduler.SchedT-BMod-eUpLim		RW
HoldingRegister	81	2	SchedDayCfg[3].SetP	Scheduler - Set point for ON+SET mode (2) (2) (Thursday)		0.0	100.0		RW
HoldingRegister	83	1	SchedDayCfg[4].StartHr	Scheduler - Time band start time (Friday)		0	23		RW
HoldingRegister	84	1	SchedDayCfg[4].StartMin	Scheduler - Time band end time (Friday)		0	59		RW
HoldingRegister	85	1	SchedDayCfg[4].WorkMode	Scheduler - Time band mode (0=OFF, 1=ON, 2=ON+SET) (Friday)		0	Scheduler.SchedT-BMod-eUpLim		RW
HoldingRegister	86	2	SchedDayCfg[4].SetP	Scheduler - Set point for ON+SET mode (2) (2) (Friday)		0.0	100.0		RW
HoldingRegister	88	1	SchedDayCfg[5].StartHr	Scheduler - Time band start time (Saturday)		0	23		RW
HoldingRegister	89	1	SchedDayCfg[5].StartMin	Scheduler - Time band end time (Saturday)		0	59		RW
HoldingRegister	90	1	SchedDayCfg[5].WorkMode	Scheduler - Time band mode (0=OFF, 1=ON, 2=ON+SET) (Saturday)		0	Scheduler.SchedT-BMod-eUpLim		RW
HoldingRegister	91	2	SchedDayCfg[5].SetP	Scheduler - Set point for ON+SET mode (2) (Saturday)		0.0	100.0		RW
HoldingRegister	93	1	UoM	Unit of measure system (0 = not set, 1 = international system, 2 = imperial system)	1	1	2		RW
HoldingRegister	94	1	Year	Current year				Years	RW
HoldingRegister	95	1	Month	Current month		1	12	Months	RW
HoldingRegister	96	1	Day	Current day		1	31	Days	RW
HoldingRegister	97	1	Hour	Current time		0	23	[h]	RW
HoldingRegister	98	1	Minute	Current minute		0	59	[min]	RW
HoldingRegister	99	1	SetTimezone	Time zone set	36	1	94		RW
HoldingRegister	100	1	SV_Command	Reset command (1=cancel alarms; 2=reset cylinder production hours, reset after 5 seconds)		0	2		RW
HoldingRegister	105	1	PreMaintWarnThrsh	Set next maintenance pre-alert time	240	0	999	[h]	RW
HoldingRegister	106	1	PreMaintWarnThrsh_Secondary	Secondary unit next maintenance pre-alert time setting	240	0	999	[h]	RW
HoldingRegister	107	1	HiConductAlrmDlyT	Set high conductivity alarm delay	60			[min]	RW
HoldingRegister	108	1	HiConductWarnThrsh	Set high conductivity warning threshold	1250	20	HiConductAlrmThrsh	[uS/cm]	RW
HoldingRegister	109	1	HiConductAlrmThrsh	Set high conductivity alarm threshold	1500	HiConductWarnThrsh	1500		RW
HoldingRegister	110	1	HiConductWarnHyst	Set high conductivity warning threshold hysteresis	25	0	100		RW
HoldingRegister	115	1	FoamLevSetPScale	Foam sensor sensitivity (0%-200% - def. 100%)	100	0	250		RW
HoldingRegister	116	1	FoamLevSetPScale_Secondary	Secondary unit foam sensor sensitivity (0%-200% - def. 100%)	100	0	250		RW
HoldingRegister	117	2	RegulationCfg.W_MinTempThrsh	Set water preheating temperature	70.0	50.0	80.0	0.1[°C]/[°F]	RW
HoldingRegister	119	2	PreheatOffset_Temp	Set temperature difference with reference to temperature set point for activation of preheating (preheating offset)	3.0	2	20.0	0.1[°C]/[°F]	RW
HoldingRegister	121	2	PreheatOffset_Hum	Set humidity difference with reference to humidity set point for activation of preheating (preheating offset)	3.0	2	20.0	0.1[%rH]	RW
HoldingRegister	123	1	PartFillsT	Set micro-fill cycle duration	5	1	199	[s]	RW
HoldingRegister	124	1	PartFillsT_Secondary	Secondary unit micro-fill cycle duration setting	5	1	199	[s]	RW
HoldingRegister	125	1	DilDrainCfg.Typ	Drain to dilute mode when micro-filling function active (0=disabled; 1=daily scheduler; 2=periodic)	2	0	2		RW

Type	Add.	Occ.	Variable name	Description	Def.	Min	Max	UoM	Access
HoldingRegister	128	2	DilDrainCfg.PeriodicDilDrain-Thrsh	Set number of hours between two periodic drain to dilute cycles if micro-filling mode active	10	1	24	[h]	RW
HoldingRegister	130	1	DilDrainCfg.DailySched[1]. Start_h	Drain to dilute - Daily scheduler (Monday) - hours	23	0	23	[h]	RW
HoldingRegister	131	1	DilDrainCfg.DailySched[1]. Start_min	Drain to dilute - Daily scheduler (Monday) - minutes	0	0	59	[min]	RW
HoldingRegister	132	1	DilDrainCfg.DailySched[2]. Start_h	Drain to dilute - Daily scheduler (Tuesday) - hours	23	0	23	[h]	RW
HoldingRegister	133	1	DilDrainCfg.DailySched[2]. Start_min	Drain to dilute - Daily scheduler (Tuesday) - minutes	0	0	59	[min]	RW
HoldingRegister	134	1	DilDrainCfg.DailySched[3]. Start_h	Drain to dilute - Daily scheduler (Wednesday) - hours	23	0	23	[h]	RW
HoldingRegister	135	1	DilDrainCfg.DailySched[3]. Start_min	Drain to dilute - Daily scheduler (Wednesday) - minutes	0	0	59	[min]	RW
HoldingRegister	136	1	DilDrainCfg.DailySched[4]. Start_h	Drain to dilute - Daily scheduler (Thursday) - hours	23	0	23	[h]	RW
HoldingRegister	137	1	DilDrainCfg.DailySched[4]. Start_min	Drain to dilute - Daily scheduler (Thursday) - minutes	0	0	59	[min]	RW
HoldingRegister	138	1	DilDrainCfg.DailySched[5]. Start_h	Drain to dilute - Daily scheduler (Friday) - hours	23	0	23	[h]	RW
HoldingRegister	139	1	DilDrainCfg.DailySched[5]. Start_min	Drain to dilute - Daily scheduler (Friday) - minutes	0	0	59	[min]	RW
HoldingRegister	140	1	DilDrainCfg.DailySched[6]. Start_h	Drain to dilute - Daily scheduler (Saturday) - hours	23	0	23	[h]	RW
HoldingRegister	141	1	DilDrainCfg.DailySched[6]. Start_min	Drain to dilute - Daily scheduler (Saturday) - minutes	0	0	59	[min]	RW
HoldingRegister	142	1	DilDrainCfg.DailySched[7]. Start_h	Drain to dilute - Daily scheduler (Sunday) - hours	23	0	23	[h]	RW
HoldingRegister	143	1	DilDrainCfg.DailySched[7]. Start_min	Drain to dilute - Daily scheduler (Sunday) - minutes	0	0	59	[min]	RW
HoldingRegister	144	2	PeriodicDrainThrsh	Set number of production hours between two periodic total drain cycles	10	1	999	[h]	RW
HoldingRegister	146	1	ExtFanDTOn	Set start blower delay from start of production	0	0	600	[s]	RW
HoldingRegister	147	1	ExtFanDTOff	Set stop blower delay from end of production	90	0	600	[s]	RW
HoldingRegister	148	1	EvapCycleNoThrsh_S	Secondary unit number of evaporation cycles setting for drain to dilute if micro-filling mode not active (0=AUTO)	0	0	MaxEvap-CycleNo		RW
HoldingRegister	149	1	FillTScale_Secondary	Secondary unit additional filling time modification setting after reaching green LED level if micro-filling mode not active	100	20	100	[%]	RW
HoldingRegister	150	1	DilDrainTScale_Secondary	Secondary unit drain time modification setting	100	5	190	[%]	RW
HoldingRegister	304	2	ManMode_Fan1_PWM	Fan 1 speed setting in manual mode		Fan_1_cfg. MinSpeed	Fan_1_ cfg.Max-Speed	[rpm]	RW
HoldingRegister	306	2	ManMode_Fan2_PWM	Fan 2 speed setting in manual mode		Fan_2_cfg. MinSpeed	Fan_2_ cfg.Max-Speed	[rpm]	RW
HoldingRegister	308	2	ManMode_Fan3_PWM	Fan 3 speed setting in manual mode		Fan_1_cfg. MinSpeed	Fan_1_ cfg.Max-Speed	[rpm]	RW
HoldingRegister	310	2	Man_ProdReqM8	Manual production request					RW
HoldingRegister	312	1	MaxUnitProd	Set maximum production value	100.0	Regula-tionCfg. MinReq	100.0	0.1[%]	RW
InputRegister	1	1	SV_SWVer	Software version					RW
InputRegister	2	1	SV_OSVer	Operating system version					RW
InputRegister	3	1	UnitModel	Unit model					RW
InputRegister	4	2	MainPrb	Main probe reading					RW
InputRegister	6	2	LimitPrb	Limit probe reading					RW
InputRegister	8	2	PreheatPrb	Preheating probe reading				0.1[°C]/[°F]	RW
InputRegister	10	1	Conductivity_Calc	Inlet water conductivity reading		20	1509	[uS/cm]	RW
InputRegister	11	1	WirelessPrbVal_1.Hum	Wireless probe 1 - Humidity value in %rH (SA and SI probes only)					RW
InputRegister	13	1	WirelessPrbVal_1.Temp	Wireless probe 1 - Temperature value in °C					RW
InputRegister	15	1	WirelessPrbInfo_1.BattLev	Wireless probe 1 - Battery level from 0 to 3600 mV (below 2800 mV the battery level is low)					RW
InputRegister	16	1	WirelessPrbInfo_1.RadioSig-nalLev	Wireless probe 1 - Radio signal level in dBm+100 (8-15 = LOW; 15-30 = MEDIUM, >30 = EXCEL-LENT)					RW
InputRegister	17	1	WirelessPrbVal_2.Hum	Wireless probe 2 - Humidity value in %rH (SA and SI probes only)					RW
InputRegister	19	1	WirelessPrbVal_2.Temp	Wireless probe 2 - Temperature value in °C					RW
InputRegister	21	1	WirelessPrbInfo_2.BattLev	Wireless probe 2 - Battery level from 0 to 3600 mV (below 2800 mV the battery level is low)					RW
InputRegister	22	1	WirelessPrbInfo_2.RadioSig-nalLev	Wireless probe 2 - Radio signal level in dBm+100 (8-15 = LOW; 15-30 = MEDIUM, >30 = EXCEL-LENT)					RW
InputRegister	23	1	WirelessPrbVal_3.Hum	Wireless probe 3 - Humidity value in %rH (SA and SI probes only)					RW
InputRegister	25	1	WirelessPrbVal_3.Temp	Wireless probe 3 - Temperature value in °C					RW
InputRegister	27	1	WirelessPrbInfo_3.BattLev	Wireless probe 3 - Battery level from 0 to 3600 mV (below 2800 mV the battery level is low)					RW
InputRegister	28	1	WirelessPrbInfo_3.RadioSig-nalLev	Wireless probe 3 - Radio signal level in dBm+100 (8-15 = LOW; 15-30 = MEDIUM, >30 = EXCEL-LENT)					RW
InputRegister	29	1	WirelessPrbVal_4.Hum	Wireless probe 4 - Humidity value in %rH (SA and SI probes only)					RW
InputRegister	31	1	WirelessPrbVal_4.Temp	Wireless probe 4 - Temperature value in °C					RW
InputRegister	33	1	WirelessPrbInfo_4.BattLev	Wireless probe 4 - Battery level from 0 to 3600 mV (below 2800 mV the battery level is low)					RW

Type	Add.	Occ.	Variable name	Description	Def.	Min	Max	UoM	Access
InputRegister	34	1	WirelessPrbInfo_4.RadioSig-nalLev	Wireless probe 4 - Radio signal level in dBm+100 (8-15 = LOW; 15-30 = MEDIUM, >30 = EXCEL-LENT)					RW
InputRegister	35	1	UnitStatus	Unit status*					RW
InputRegister	36	2	CurrProdPh	Current production		0.0	NomProd	0.1[kg/h]/ [lb/h]	RW
InputRegister	38	2	WorkHr	Total unit operating hours				[h]	RW
InputRegister	40	2	CylWorkHr	Cylinder production hours		0		[h]	RW
InputRegister	42	2	NetReq	Total current production as a % (M/S mode only)				0.1[%]	RW
InputRegister	44	2	NetProd	Total current production in kg/h / lb/h (M/S mode only)				0.1[kg/h]/ [lb/h]	RW
InputRegister	46	1	NetStatus[1]	Status of network unit 1 *					RW
InputRegister	47	1	NetStatus[2]	Status of network unit 2 *					RW
InputRegister	48	1	NetStatus[3]	Status of network unit 3 *					RW
InputRegister	49	1	NetStatus[4]	Status of network unit 4 *					RW
InputRegister	50	1	NetStatus[5]	Status of network unit 5 *					RW
InputRegister	51	1	NetStatus[6]	Status of network unit 6 *					RW
InputRegister	52	1	NetStatus[7]	Status of network unit 7 *					RW
InputRegister	53	1	NetStatus[8]	Status of network unit 8 *					RW
InputRegister	54	1	NetStatus[9]	Status of network unit 9 *					RW
InputRegister	55	1	NetStatus[10]	Status of network unit 10 *					RW
InputRegister	56	1	NetStatus[11]	Status of network unit 11 *					RW
InputRegister	57	1	NetStatus[12]	Status of network unit 12 *					RW
InputRegister	58	1	NetStatus[13]	Status of network unit 13 *					RW
InputRegister	59	1	NetStatus[14]	Status of network unit 14 *					RW
InputRegister	60	1	NetStatus[15]	Status of network unit 15 *					RW
InputRegister	61	1	NetStatus[16]	Status of network unit 16 *					RW
InputRegister	62	1	NetStatus[17]	Status of network unit 17 *					RW
InputRegister	63	1	NetStatus[18]	Status of network unit 18 *					RW
InputRegister	64	1	NetStatus[19]	Status of network unit 19 *					RW
InputRegister	65	1	NetStatus[20]	Status of network unit 20 *					RW
InputRegister	106	1	SV_CommandResult	Response to the cylinder production hours reset command (1=ok, 2=failed, 3=invalid command; reset after 5 seconds)					RW
InputRegister	108	2	Burner_1_Tach	Fan 1 speed reading				0.1[rpm]	RW
InputRegister	110	2	Burner_2_Tach	Fan 2 speed reading				0.1[rpm]	RW
InputRegister	112	2	Burner_MB_3_Tach	Fan 3 speed reading				0.1[rpm]	RW
InputRegister	114	2	Temp_Fumes_1	Flue gas temperature - Probe 1 reading				0.1[°C]/[°F]	RW
InputRegister	116	2	Temp_Fumes_2	Flue gas temperature - Probe 2 reading				0.1[°C]/[°F]	RW
InputRegister	118	2	Temp_Fumes_MB_3	Flue gas temperature - Probe 3 reading				0.1[°C]/[°F]	RW
InputRegister	120	2	Fan1_PWM	Fan 1 speed set point		0.0	1000.0		RW
InputRegister	122	2	Fan2_PWM	Fan 2 speed set point		0.0	1000.0		RW
InputRegister	124	2	Fan3_PWM	Fan 3 speed set point		0	100.0		RW
InputRegister	126	2	Fan_1_cfg.FAN_STATUS	Status of fan 1 ***					RW
InputRegister	128	2	Fan_2_cfg.FAN_STATUS	Status of fan 2 ***					RW
InputRegister	130	2	Fan1_SetSpeed	Fan 1 speed setting					RW
InputRegister	132	2	Fan2_SetSpeed	Fan 2 speed setting					RW
InputRegister	134	2	FoamLevReal	Signal reading from foam sensor					RW
InputRegister	143	2	Fan_3_STATUS	Status of fan 3 ***					RW
InputRegister	147	2	WorkHr_Secondary	Secondary unit total operating hours				[h]	RW
InputRegister	149	2	CylWorkHr_Secondary	Secondary unit cylinder production hours		0		[h]	RW
InputRegister	151	2	Fan_1_cfg.Hours_Count	Fan 1 operating hours				[h]	RW
InputRegister	153	2	WorkHrCntDwn	Time remaining until next maintenance (demin-eralised water)				[h]	RW
InputRegister	155	2	WorkHrCntDwn_120	Time remaining until next maintenance (mains water)				[h]	RW
InputRegister	170	1	CylResDate.Year	Cylinder production hours reset date - Year				Years	RW
InputRegister	171	1	CylResDate.Month	Cylinder production hours reset date - Month				Months	RW
InputRegister	172	1	CylResDate.Day	Cylinder production hours reset date - Day				Days	RW
InputRegister	173	1	CylResDate.Hour	Cylinder production hours reset date - Hours				[h]	RW
InputRegister	174	1	CylResDate.Minute	Cylinder production hours reset date - Minutes				[min]	RW
InputRegister	175	1	CylResDate_S.Year	Secondary unit cylinder production hours reset date - Year				Years	RW
InputRegister	176	1	CylResDate_S.Month	Secondary unit cylinder production hours reset date - Month				Months	RW
InputRegister	177	1	CylResDate_S.Day	Secondary unit cylinder production hours reset date - Day				Days	RW
InputRegister	178	1	CylResDate_S.Hour	Secondary unit cylinder production hours reset date - Hours				[h]	RW
InputRegister	179	1	CylResDate_S.Minute	Secondary unit cylinder production hours reset date - Minutes				[min]	RW
InputRegister	180	2	ID_Lang	Current user interface language (0 = English; 1 = Italian; 2 = French; 3 = German; 4 = Spanish)	-1				RW
InputRegister	182	2	WorkHrCntDwn_Secondary	Time remaining until next maintenance (demin-eralised water), Secondary				[h]	RW
InputRegister	184	2	WorkHrCntDwn_120_Sec-ondary	Time remaining until next maintenance (mains water), Secondary				[h]	RW
InputRegister	186	1	UnitStatus_Secondary	Secondary unit status *					RW
InputRegister	190	2	OSVersion[1]	Operating system version (major release)					RW
InputRegister	196	1	Conductivity_Secondary	Secondary unit inlet water conductivity reading		20	1509	[uS/cm]	RW
InputRegister	198	2	PreheatPrbMsk_Secondary	Secondary unit preheating probe reading				0.1[°C]/[°F]	RW
InputRegister	312	2	ProdReqMsk	Production request				0.1[%]	RW
InputRegister	314	2	ProdReqMsk_Secondary	Secondary unit production request				0.1[%]	RW
InputRegister	316	2	CurrProdPh_Secondary	Secondary unit current production		0	NomProd	0.1[kg/h]/ [lb/h]	RW
InputRegister	320	2	Fan_2_cfg.Hours_Count	Fan 2 operating hours				[h]	RW
InputRegister	322	2	Fan_3_cfg.Hours_Count	Fan 3 operating hours				[h]	RW

Tab. 15.c

15.1.3 Table of Bacnet variables

The variables used for the Bacnet protocol are shown below

RW= Read/Write

Type	Add.	Variable name	Description	Def.	Min	Max	UoM	Access
AnalogInput	41	WirelessPrbVal_1.Hum	Wireless probe 1 - Humidity value in %rH (for SA and SI probes only)					RW
AnalogInput	42	WirelessPrbVal_1.Temp	Wireless probe 1 - Temperature value in °C					RW
AnalogInput	45	WirelessPrbVal_2.Hum	Wireless probe 2 - Humidity value in %rH (for SA and SI probes only)					RW
AnalogInput	46	WirelessPrbVal_2.Temp	Wireless probe 2 - Temperature value in °C					RW
AnalogInput	49	WirelessPrbVal_3.Hum	Wireless probe 3 - Humidity value in %rH (for SA and SI probes only)					RW
AnalogInput	50	WirelessPrbVal_3.Temp	Wireless probe 3 - Temperature value in °C					RW
AnalogInput	53	WirelessPrbVal_4.Hum	Wireless probe 4 - Humidity value in %rH (for SA and SI probes only)					RW
AnalogInput	54	WirelessPrbVal_4.Temp	Wireless probe 4 - Temperature value in °C					RW
AnalogValue	0	ManReq	Set production request in manual mode				Percent	RW
AnalogValue	1	GlbSetP_Hum	Set humidity value (humidity set point)	50.0	0	100.0	PercentRelativeHumidity	RW
AnalogValue	2	GlbSetP_Temp	Temperature value setting (temperature set point)	42.0	0	100.0	DegreesCelsius	RW
AnalogValue	3	RegulationCfg.Hyst	Unit control parameters - Control hysteresis	2.0	0.5	100.0		RW
AnalogValue	4	RegulationCfg.Diff	Unit control parameters - Differential (for modulating control)	5.0				RW
AnalogValue	5	GlbSetPLim_Hum	Set humidity limit value (humidity limit set point)	100.0	0	100.0	PercentRelativeHumidity	RW
AnalogValue	6	GlbSetPLim_Temp	Set temperature limit value (temperature limit set point)	50.0	0	100	DegreesCelsius	RW
AnalogValue	7	RegulationCfg.DiffLim	Unit control parameters - Limit differential (for modulating control)	5.0				RW
AnalogValue	8	RegulationCfg.MinReq	Unit control parameters - Minimum request	4.0	25.0	MaxUnitProd	Percent	RW
AnalogValue	9	AlrmThrshHumLo	Set low humidity alarm threshold, main probe	0.0		AlrmThrshHumHi	PercentRelativeHumidity	RW
AnalogValue	10	AlrmThrshHumHi	Set high humidity alarm threshold, main probe	100.0	AlrmThrshHumLo		PercentRelativeHumidity	RW
AnalogValue	11	AlrmThrshHumHiLim	Set low humidity alarm threshold, limit probe	100.0	0	100.0	PercentRelativeHumidity	RW
AnalogValue	12	AlrmThrshTempLo	Set low temperature alarm threshold, main probe	0.0		AlrmThrshTempHi	DegreesCelsius	RW
AnalogValue	13	AlrmThrshTempHi	Set high temperature alarm threshold, main probe	60.0	AlrmThrshTempLo		DegreesCelsius	RW
AnalogValue	14	AlrmThrshTempHiLim	Set low temperature alarm threshold, limit probe	60.0			DegreesCelsius	RW
AnalogValue	15	MainPrbCfg.Mi_Hum	Main probe configuration - Minimum for humidity control	0	0	100	PercentRelativeHumidity	RW
AnalogValue	16	MainPrbCfg.Ma_Hum	Main probe configuration - Maximum for humidity control	100.0	0	100	PercentRelativeHumidity	RW
AnalogValue	17	MainPrbCfg.Mi_Temp	Main probe configuration - Minimum for temperature control	-20.0			DegreesCelsius	RW
AnalogValue	18	MainPrbCfg.Ma_Temp	Main probe configuration - Maximum for temperature control	70.0			DegreesCelsius	RW
AnalogValue	19	LimitPrbCfg.Mi_Hum	Limit probe configuration - Minimum for humidity control	0	0	100	PercentRelativeHumidity	RW
AnalogValue	20	LimitPrbCfg.Ma_Hum	Limit probe configuration - Maximum for humidity control	100.0	0	100	PercentRelativeHumidity	RW
AnalogValue	21	LimitPrbCfg.Mi_Temp	Limit probe configuration - Minimum for temperature control	-20.0			DegreesCelsius	RW
AnalogValue	22	LimitPrbCfg.Ma_Temp	Limit probe configuration - Maximum for temperature control	70.0			DegreesCelsius	RW
AnalogValue	23	RegulationCfg.PwrCorrectionFactor	Unit control parameters - Correction factor (0=no correction)	29.0				RW
AnalogValue	24	SchedDayCfg[0].SetP	Scheduler - Set point for ON+SET mode (2) (Monday)					RW
AnalogValue	25	SchedDayCfg[1].SetP	Scheduler - Set point for ON+SET mode (2) (Tuesday)					RW
AnalogValue	26	SchedDayCfg[2].SetP	Scheduler - Set point for ON+SET mode (2) (Wednesday)					RW
AnalogValue	27	SchedDayCfg[3].SetP	Scheduler - Set point for ON+SET mode (2) (2) (Thursday)					RW
AnalogValue	28	SchedDayCfg[4].SetP	Scheduler - Set point for ON+SET mode (2) (2) (Friday)					RW
AnalogValue	29	SchedDayCfg[5].SetP	Scheduler - Set point for ON+SET mode (2) (Saturday)					RW
AnalogValue	30	Man_ProdReqM8	Manual production request					RW
AnalogValue	31	MainPrb	Main probe reading					RW
AnalogValue	32	LimitPrb	Limit probe reading					RW
AnalogValue	33	PreheatPrb	Preheating probe reading				DegreesCelsius	RW
AnalogValue	34	CurrProdPh	Current production		0	NomProd	KilogramsPerHour	RW
AnalogValue	35	NetReq	Total current production as a % (M/S mode only)				Percent	RW
AnalogValue	36	NetProd	Total current production in kg/h / lb/h (M/S mode only)				Kilograms	RW
AnalogValue	37	Burner_1_Tach	Fan 1 speed reading				RevolutionsPerMinute	RW
AnalogValue	38	Burner_2_Tach	Fan 2 speed reading				RevolutionsPerMinute	RW
AnalogValue	39	Burner_MB_3_Tach	Fan 3 speed reading				RevolutionsPerMinute	RW

Type	Add.	Variable name	Description	Def.	Min	Max	UoM	Access
AnalogValue	40	Temp_Fumes_1	Flue gas temperature - Probe 1 reading				Degrees Celsius	RW
AnalogValue	41	Temp_Fumes_2	Flue gas temperature - Probe 2 reading				Degrees Celsius	RW
AnalogValue	42	Temp_Fumes_MB_3	Flue gas temperature - Probe 3 reading				Degrees Celsius	RW
AnalogValue	43	Fan1_PWM	Fan 1 speed set point		0.0	1000.0		RW
AnalogValue	44	Fan2_PWM	Fan 2 speed set point		0.0	1000.0		RW
AnalogValue	45	Fan3_PWM	Fan 3 speed set point		0	100.0		RW
AnalogValue	46	Fan1_SetSpeed	Fan 1 speed setting					RW
AnalogValue	47	Fan2_SetSpeed	Fan 2 speed setting					RW
AnalogValue	48	FoamLevReal	Signal reading from foam sensor					RW
AnalogValue	59	RegulationCfg.W_ MinTempThrsh	Set water preheating temperature	70.0	50.0	80.0	Degrees Celsius	RW
AnalogValue	60	PreheatOffset_Temp	Set temperature difference with reference to temperature set point for activation of preheating (preheating offset)	3.0	2	20.0	Degrees Celsius	RW
AnalogValue	61	PreheatOffset_Hum	Set humidity difference with reference to humidity set point for activation of preheating (preheating offset)	3.0	2	20.0	PercentRela-tiveHumidity	RW
AnalogValue	62	ManMode_Fan1_PWM	Fan 1 speed setting in manual mode		Fan_1_cfg. MinSpeed	Fan_1_cfg. MaxSpeed	Revolution-sPerMinute	RW
AnalogValue	63	ManMode_Fan2_PWM	Fan 2 speed setting in manual mode		Fan_2_cfg. MinSpeed	Fan_2_cfg. MaxSpeed	Revolution-sPerMinute	RW
AnalogValue	64	ManMode_Fan3_PWM	Fan 3 speed setting in manual mode		Fan_1_cfg. MinSpeed	Fan_1_cfg. MaxSpeed	Revolution-sPerMinute	RW
AnalogValue	65	Man_ProdReqM8	Manual production request					RW
AnalogValue	66	MaxUnitProd	Set maximum production value	100.0	Regulation-Cfg.MinReq	100.0	Percent	RW
AnalogValue	70	ProdReqMsk	Production request				Percent	RW
AnalogValue	71	ProdReqMsk_Secondary	Secondary unit production request				Percent	RW
AnalogValue	72	CurrProdPh_Secondary	Secondary unit current production		0	NomProd	Kilograms PerHour	RW
AnalogValue	73	SV_PwrReq	Production request from supervisor		0.0	100.0	Percent	RW
AnalogValue	74	PreheatPrb_Secondary	Secondary unit preheating probe reading				Degrees Celsius	RW
BinaryValue	0	OnBySV	Unit On/Off signal from supervisor					RW
BinaryValue	5	WHardnessTyp	Set water hardness management mode (0 = AUTO; 1 = MANUAL)	TRUE				RW
BinaryValue	6	SchedDayCfg[0].EnTB	Scheduler - Enable time band (Monday)					RW
BinaryValue	7	SchedDayCfg[1].EnTB	Scheduler - Enable time band (Tuesday)					RW
BinaryValue	8	SchedDayCfg[2].EnTB	Scheduler - Enable time band (Wednesday)					RW
BinaryValue	9	SchedDayCfg[3].EnTB	Scheduler - Enable time band (Thursday)					RW
BinaryValue	10	SchedDayCfg[4].EnTB	Scheduler - Enable time band (Friday)					RW
BinaryValue	11	SchedDayCfg[5].EnTB	Scheduler - Enable time band (Saturday)					RW
BinaryValue	12	ManExtFan	Blower command in manual mode (0=OFF, 1=ON)					RW
BinaryValue	15	ManFillPmpStatus_Sec-ondary	Fill valve control in manual mode (0=OFF, 1=ON), Secondary unit					RW
BinaryValue	16	ManDrainPmpStatus_ Secondary	Drain pump command in manual mode (0=OFF, 1=ON), Secondary unit					RW
BinaryValue	17	ManExtFan_Secondary	Blower command in manual mode (0=OFF, 1=ON), Secondary unit					RW
BinaryValue	30	RemOn	Unit On/Off signal from digital input (ON = TRUE)					RW
BinaryValue	32	LevSenStatus.Low	Level sensor status - Low level					RW
BinaryValue	33	LevSenStatus.Hi	Level sensor status - High level					RW
BinaryValue	34	LevSenStatus.Foam	Level sensor status - Foam level					RW
BinaryValue	35	OnOffStatus	Unit On/Off status					RW
BinaryValue	36	PreMaintWarn	Next maintenance pre-alert					RW
BinaryValue	37	CurrBlkAlrm.IsBlocker	At least 1 non-resettable alarm active					RW
BinaryValue	38	CurrBlkAlrm.IsPresent	At least 1 alarm active					RW
BinaryValue	39	CurrBlkAlrm.Warning	At least 1 warning active					RW
BinaryValue	40	Alrm_Autotest.Active	Alarm ALC01: Autotest failed					RW
BinaryValue	41	Alrm_HighConduct Al.Active	Alarm ALC02: High conductivity					RW
BinaryValue	42	Alrm_LevSen.Active	Alarm ALC03: Level sensor broken					RW
BinaryValue	43	Alrm_ThermPtc.Active	Alarm ALC04: High heater temperature					RW
BinaryValue	44	Alrm_WMiss.Active	Alarm ALB01: No water					RW
BinaryValue	45	Alrm_LowProd.Active	Alarm ALB02: Low production					RW
BinaryValue	46	Alrm_MainPrb.Active	Alarm ALA01: Main probe broken or not connected					RW
BinaryValue	47	Alrm_LimPrb.Active	Alarm ALA02: Limit probe broken or not connected					RW
BinaryValue	48	Alrm_PreHPrb.Active	Alarm ALA03: Preheating probe broken or not connected					RW
BinaryValue	49	Alrm_HiHum.Active	Alarm ALH01: High humidity/temperature					RW
BinaryValue	50	Alrm_LoHum.Active	Alarm ALH02: Low humidity/temperature					RW
BinaryValue	51	Alrm_HiHum_Lim. Active	Alarm ALH03: High limit humidity/temperature					RW
BinaryValue	52	Alrm_Foam.Active	Alarm ALW01: Foam warning					RW
BinaryValue	53	Alrm_PeriodicMaint. Active	Alarm ALT01: Maintenance request					RW
BinaryValue	54	Alrm_CylFull.Active	Alarm ALW02: Cylinder full					RW
BinaryValue	55	Alrm_ConductPrb. Active	Alarm ALA04: Conductivity meter					RW
BinaryValue	56	Alrm_HighConductWr. Active	Warning ALW03: High conductivity					RW
BinaryValue	57	Alrm_RetMem.Active	Alarm ALR01: Retain memory					RW
BinaryValue	58	Warn_Autotest.Active	Warning ALW04: Autotest log only					RW
BinaryValue	59	Warn_LevSen.Active	Warning ALW05: Level sensor log only					RW

Type	Add.	Variable name	Description	Def.	Min	Max	UoM	Access
BinaryValue	60	Warn_LowProd.Active	Warning ALW06: Low production log only					RW
BinaryValue	61	Alrm_WirelessPrb_1_ Offline.Active	Alarm ALP01: Wireless probe 1 offline					RW
BinaryValue	62	Alrm_WirelessPrb_2_ Offline.Active	Alarm ALP02: Wireless probe 2 offline					RW
BinaryValue	63	Alrm_WirelessPrb_3_ Offline.Active	Alarm ALP03: Wireless probe 3 offline					RW
BinaryValue	64	Alrm_WirelessPrb_4_ Offline.Active	Alarm ALP04: Wireless probe 4 offline					RW
BinaryValue	65	Alrm_MissingModel. Active	Alarm ALM01: Model not set					RW
BinaryValue	66	Alrm_NetUnit_1.Active	Alarm ALN01: Problems on network unit 1					RW
BinaryValue	67	Alrm_NetUnit_2.Active	Alarm ALN02: Problems on network unit 2					RW
BinaryValue	68	Alrm_NetUnit_3.Active	Alarm ALN03: Problems on network unit 3					RW
BinaryValue	69	Alrm_NetUnit_4.Active	Alarm ALN04: Problems on network unit 4					RW
BinaryValue	70	Alrm_NetUnit_5.Active	Alarm ALN05: Problems on network unit 5					RW
BinaryValue	71	Alrm_NetUnit_6.Active	Alarm ALN06: Problems on network unit 6					RW
BinaryValue	72	Alrm_NetUnit_7.Active	Alarm ALN07: Problems on network unit 7					RW
BinaryValue	73	Alrm_NetUnit_8.Active	Alarm ALN08: Problems on network unit 8					RW
BinaryValue	74	Alrm_NetUnit_9.Active	Alarm ALN09: Problems on network unit 9					RW
BinaryValue	75	Alrm_NetUnit_10.Active	Alarm ALN10: Problems on network unit 10					RW
BinaryValue	76	Alrm_NetUnit_11.Active	Alarm ALN11: Problems on network unit 11					RW
BinaryValue	77	Alrm_NetUnit_12.Active	Alarm ALN12: Problems on network unit 12					RW
BinaryValue	78	Alrm_NetUnit_13.Active	Alarm ALN13: Problems on network unit 13					RW
BinaryValue	79	Alrm_NetUnit_14.Active	Alarm ALN14: Problems on network unit 14					RW
BinaryValue	80	Alrm_NetUnit_15.Active	Alarm ALN15: Problems on network unit 15					RW
BinaryValue	81	Alrm_NetUnit_16.Active	Alarm ALN16: Problems on network unit 16					RW
BinaryValue	82	Alrm_NetUnit_17.Active	Alarm ALN17: Problems on network unit 17					RW
BinaryValue	83	Alrm_NetUnit_18.Active	Alarm ALN18: Problems on network unit 18					RW
BinaryValue	84	Alrm_NetUnit_19.Active	Alarm ALN19: Problems on network unit 19					RW
BinaryValue	85	Alrm_NetUnit_20.Active	Alarm ALN20: Problems on network unit 20					RW
BinaryValue	86	Alrm_WirelessPrb_1_ LowBatt.Active	Alarm ALP05: Wireless probe 1 low battery					RW
BinaryValue	87	Alrm_WirelessPrb_2_ LowBatt.Active	Alarm ALP06: Wireless probe 2 low battery					RW
BinaryValue	88	Alrm_WirelessPrb_3_ LowBatt.Active	Alarm ALP07: Wireless probe 3 low battery					RW
BinaryValue	89	Alrm_WirelessPrb_4_ LowBatt.Active	Alarm ALP08: Wireless probe 4 low battery					RW
BinaryValue	90	Alrm_WirelessPrb_Main. Active	Alarm ALA05: Main probe probe not available					RW
BinaryValue	91	Alrm_WirelessPrb_Limit. Active	Alarm ALA06: Limit probe probe not available					RW
BinaryValue	100	Klixon_Fan_1	Flue gas Klixon safety thermostat status 1					RW
BinaryValue	101	Klixon_Fan_2	Flue gas Klixon safety thermostat status 2					RW
BinaryValue	102	Klixon_Fan_MB_3	Flue gas Klixon safety thermostat status 3					RW
BinaryValue	103	Flame_1_Present	Burner 1 flame presence status					RW
BinaryValue	104	Flame_2_Present	Burner 2 flame presence status					RW
BinaryValue	105	Flame_MB_3_Present	Burner 3 flame presence status					RW
BinaryValue	106	Burner1_GO	Burner 1 gas ignition command status					RW
BinaryValue	107	Burner2_GO	Burner 2 gas ignition command status					RW
BinaryValue	108	Burner3_GO	Burner 3 gas ignition command status					RW
BinaryValue	112	BackupHwReq	Hardware backup request					RW
BinaryValue	113	Alrm_Termic_Fan_1. Active	Alarm ALA07: Thermal protector 1 active					RW
BinaryValue	114	Alrm_Termic_Fan_2. Active	Alarm ALA08: Thermal protector 2 active					RW
BinaryValue	115	Alrm_Fumes_1_broke. Active	Alarm ALP10: Flue gas probe 1 broken					RW
BinaryValue	116	Alrm_Fumes_2_broke. Active	Alarm ALP11: Flue gas probe 2 broken					RW
BinaryValue	117	Alrm_warning_ fumes_1.Active	Warning ALP13: Flue gas 1					RW
BinaryValue	118	Alrm_warning_ fumes_2.Active	Warning ALP14: Flue gas 2					RW
BinaryValue	119	Alrm_fumes_1.Active	Alarm ALP16: Flue gas 1					RW
BinaryValue	120	Alrm_fumes_2.Active	Alarm ALP17: Flue gas 2					RW
BinaryValue	121	Alrm_Termic_Fan_3. Active	Alarm ALA09: Thermal protector 3 active					RW
BinaryValue	122	Alrm_Fumes_3_broke. Active	Alarm ALP12: Flue gas probe 3 broken					RW
BinaryValue	123	Alrm_fumes_3.Active	Alarm ALP18: Flue gas 3					RW
BinaryValue	124	Alrm_warning_ fumes_3.Active	Warning ALP15: Flue gas 3					RW
BinaryValue	125	Alrm_Fan_1.Active	Alarm ALA10: Fan 1					RW
BinaryValue	126	Alrm_Fan_2.Active	Alarm ALA11: Fan 2					RW
BinaryValue	127	Alrm_Fan_3.Active	Alarm ALA12: Fan 3					RW
BinaryValue	128	Al_AntiFreeze_1.Active	Alarm ALA13: Frost protection check components					RW
BinaryValue	129	Al_Secondary_450_OffLine.Active	Alarm ALA14: Secondary 450 online					RW
BinaryValue	130	Al_Main_450_OffLine. Active	Alarm ALA15: Main 450 offline					RW
BinaryValue	131	Al_AntiFreeze_2_Secondary.Active	Alarm ALA17: Secondary frost protection					RW
BinaryValue	132	Al_Speed_Fault_Fan_1. Active	Alarm ALA20: Fan 1 speed error					RW
BinaryValue	133	Al_Speed_Fault_Fan_2. Active	Alarm ALA21: Fan 2 speed error					RW
BinaryValue	134	Al_Speed_Fault_Fan_3. Active	Alarm ALA22: Fan 3 speed error					RW

Type	Add.	Variable name	Description	Def.	Min	Max	UoM	Access
BinaryValue	135	Alrm_SVOffline.Active	Alarm ALP21: Supervisor offline					RW
BinaryValue	136	Alrm_MissingModel_S.Active	Alarm ALP24: No secondary model					RW
BinaryValue	137	Alrm_WMiss_S.Active	Alarm ALP25: Secondary no water					RW
BinaryValue	138	Alrm_Foam_S.Active	Alarm ALM21: Secondary foam warning					RW
BinaryValue	139	Alrm_LowProd_S.Active	Alarm ALB03: Secondary low production					RW
BinaryValue	140	Alrm_LevSen_S.Active	Alarm ALC05: Secondary level sensor broken					RW
BinaryValue	141	Alrm_Autotest_S.Active	Alarm ALC06: Secondary autotest failed					RW
BinaryValue	142	Alrm_CylFull_S.Active	Alarm ALW12: Secondary cylinder full alarm					RW
BinaryValue	143	Alrm_HighConductAl_S.Active	Alarm ALC07: Secondary high conductivity					RW
BinaryValue	144	Alrm_PreHPrb_S.Active	Alarm ALA18: Secondary preheating probe broken or disconnected					RW
BinaryValue	145	Alrm_ConductPrb_S.Active	Alarm ALA19: Secondary conductivity probe					RW
BinaryValue	146	Alrm_RetMem_S.Active	Alarm ALR02: Secondary retain memory					RW
BinaryValue	147	Warn_Autotest_S.Active	Warning ALW07: Secondary autotest					RW
BinaryValue	148	Warn_LevSen_S.Active	Warning ALW10: Secondary level sensor					RW
BinaryValue	149	Warn_LowProd_S.Active	Warning ALW11: Secondary low production					RW
BinaryValue	155	Al_AntiFreeze_2.Active	Alarm ALA16: Frost protection force preheating					RW
BinaryValue	156	EnHiConductAlrm	Enable high conductivity alarm	TRUE				RW
BinaryValue	157	ManDrain	Manual total drain command (1=startup; value changes from 1 to 0 when drain is complete)					RW
BinaryValue	158	ManDrain_Secondary	Manual total drain command, Secondary unit (1=startup; value changes from 1 to 0 when drain is complete)					RW
BinaryValue	159	EnPreheatOff	Enable preheating function (0=disabled, 1=enabled)	FALSE				RW
BinaryValue	160	EnPartFills	Enable micro-filling function to restore water level (0=disabled, 1=enabled)	FALSE				RW
BinaryValue	161	DilDrainCfg.Daily-Sched[1].Enable	Drain to dilute - Daily scheduler (Monday) - enable	TRUE				RW
BinaryValue	162	DilDrainCfg.Daily-Sched[2].Enable	Drain to dilute - Daily scheduler (Tuesday) - enable	TRUE				RW
BinaryValue	163	DilDrainCfg.Daily-Sched[3].Enable	Drain to dilute - Daily scheduler (Wednesday) - enable	TRUE				RW
BinaryValue	164	DilDrainCfg.Daily-Sched[4].Enable	Drain to dilute - Daily scheduler (Thursday) - enable	TRUE				RW
BinaryValue	165	DilDrainCfg.Daily-Sched[5].Enable	Drain to dilute - Daily scheduler (Friday) - enable	TRUE				RW
BinaryValue	166	EnPeriodicDrain	Enable periodic total drain (0=disabled, 1=enabled)	FALSE				RW
BinaryValue	167	UnitPause	Set unit paused (0= not paused; 1= paused)					RW
BinaryValue	168	CylWorkHrRes_Sec-ondary	Secondary unit cylinder production hours reset command					RW
BinaryValue	170	ManMode_Fan1	Fan 1 command in manual mode (0=OFF, 1=ON)					RW
BinaryValue	171	ManMode_Fan2	Fan 2 command in manual mode (0=OFF, 1=ON)					RW
BinaryValue	172	ManMode_Burner1	Burner 1 command in manual mode (0=OFF, 1=ON)					RW
BinaryValue	173	ManMode_Burner2	Burner 2 command in manual mode (0=OFF, 1=ON)					RW
BinaryValue	174	Man_DOutM5	Value of programmable digital output M5.2 (see DOutM5Cfg)					RW
BinaryValue	175	Man_DOutM6	Value of programmable digital output M6 (see DOutM5Cfg)					RW
BinaryValue	176	Man_OnOffStatus	Unit manual On/Off command					RW
BinaryValue	178	DisableVarUnitPause	Disable pause from monitoring service (0: pause not disabled, 1: pause disabled)					RW
BinaryValue	182	EnManReq	Enable manual production request					RW
BinaryValue	183	Main_450	Main-Secondary 450 mode status (0 = NOT ACTIVE; 1 = ACTIVE)	FALSE				RW
BinaryValue	184	ManMode_Fan3	Fan 3 command in manual mode (0=OFF, 1=ON)					RW
BinaryValue	185	ManMode_Burner3	Burner 3 command in manual mode (0=OFF, 1=ON)					RW
BinaryValue	186	CurrBlkAlrm_S_IsPresent	At least 1 alarm active, Secondary unit					RW
BinaryValue	187	CurrBlkAlrm_S_Warning	At least 1 warning active, Secondary unit					RW
BinaryValue	188	Alrm_HiBoilerTemp.Active	Alarm ALP09: High boiler temperature (>110°)					RW
BinaryValue	189	Al_AntiFreeze_1_Sec-ondary.Active	Alarm ALA23: Frost protection check compo-nents, Secondary unit					RW
IntegerValue	6	ID_Lang	Current user interface language (0 = English; 1 = Italian; 2 = French; 3 = German; 4 = Spanish)	-1				RW
IntegerValue	102	Fan_1_cfg.FAN_STATUS	Status of fan 1 ***					RW
IntegerValue	103	Fan_2_cfg.FAN_STATUS	Status of fan 2 ***					RW
IntegerValue	107	Fan_3_STATUS	Status of fan 3 ***					RW
Positive IntegerValue	1	ManMode_msk	Start manual mode (0 = disabled; 1 = outputs controlled manually, 2 = production request set manually)	0				RW
Positive IntegerValue	2	RegulationCfg.RegTyp	Control mode (0 = External proportional signal; 1 = External proportional signal + limit; 2 = ON/OFF signal; 3 = Humidity (one probe); 4 = Temperature (one probe); 5 = Humidity + limit; 6 = Temperature + limit; 7 = Humidity (two probes); 8 = Temperature (two probes))	3				RW
Positive IntegerValue	3	ThrshAlrmDT	Delay for each humidity/temperature thresh-old alarm	60			Seconds	RW

Type	Add.	Variable name	Description	Def.	Min	Max	UoM	Access
Positive IntegerValue	4	MainPrbCfg.UITyp	Main probe configuration - Probe type	1				RW
Positive IntegerValue	5	LimitPrbCfg.UITyp	Limit probe configuration - Probe type	1	0	5		RW
Positive IntegerValue	6	WHardnessMan	Set water hardness value, if manual mode (0=0-10°F; 1=10-20°F; 2=20-30°F; 3=30-40°F; 4=Demineralised)			4		RW
Positive IntegerValue	7	EvapCycleNoThrsh	Set number of evaporation cycles for drain to dilute if micro-filling mode not active (0=AUTO)	0		MaxEvapCy-cleNo		RW
Positive IntegerValue	8	FillTScale	Set additional filling time modification after reaching green LED level if micro-filling mode not active	100	20	100	Percent	RW
Positive IntegerValue	9	DilDrainTScale	Set drain time modification	100	5	190	Percent	RW
Positive IntegerValue	10	Scheduler.SchedDay-ToSet	Scheduler - Day to configure (a value > 0 enables editing mode)		1	7		RW
Positive IntegerValue	11	SchedDayCfg[0].StartHr	Scheduler - Time band start time (Monday)					RW
Positive IntegerValue	12	SchedDayCfg[0]. StartMin	Scheduler - Time band end time (Monday)					RW
Positive IntegerValue	13	SchedDayCfg[0]. WorkMode	Scheduler - Time band mode (0=OFF, 1=ON, 2=ON+SET) (Monday)					RW
Positive IntegerValue	14	SchedDayCfg[1].StartHr	Scheduler - Time band start time (Tuesday)					RW
Positive IntegerValue	15	SchedDayCfg[1]. StartMin	Scheduler - Time band end time (Tuesday)					RW
Positive IntegerValue	16	SchedDayCfg[1]. WorkMode	Scheduler - Time band mode (0=OFF, 1=ON, 2=ON+SET) (Tuesday)					RW
Positive IntegerValue	17	SchedDayCfg[2].StartHr	Scheduler - Time band start time (Wednesday)					RW
Positive IntegerValue	18	SchedDayCfg[2]. StartMin	Scheduler - Time band end time (Wednesday)					RW
Positive IntegerValue	19	SchedDayCfg[2]. WorkMode	Scheduler - Time band mode (0=OFF, 1=ON, 2=ON+SET) (Wednesday)					RW
Positive IntegerValue	20	SchedDayCfg[3].StartHr	Scheduler - Time band start time (Thursday)					RW
Positive IntegerValue	21	SchedDayCfg[3]. StartMin	Scheduler - Time band end time (Thursday)					RW
Positive IntegerValue	22	SchedDayCfg[3]. WorkMode	Scheduler - Time band mode (0=OFF, 1=ON, 2=ON+SET) (Thursday)					RW
Positive IntegerValue	23	SchedDayCfg[4].StartHr	Scheduler - Time band start time (Friday)					RW
Positive IntegerValue	24	SchedDayCfg[4]. StartMin	Scheduler - Time band end time (Friday)					RW
Positive IntegerValue	25	SchedDayCfg[4]. WorkMode	Scheduler - Time band mode (0=OFF, 1=ON, 2=ON+SET) (Friday)					RW
Positive IntegerValue	26	SchedDayCfg[5].StartHr	Scheduler - Time band start time (Saturday)					RW
Positive IntegerValue	27	SchedDayCfg[5]. StartMin	Scheduler - Time band end time (Saturday)					RW
Positive IntegerValue	28	SchedDayCfg[5]. WorkMode	Scheduler - Time band mode (0=OFF, 1=ON, 2=ON+SET) (Saturday)					RW
Positive IntegerValue	29	UoM	Unit of measure system (0 = not set, 1 = international system, 2 = imperial system)	1	1	2		RW
Positive IntegerValue	30	Year	Current year				Years	RW
Positive IntegerValue	31	Month	Current month				Months	RW
Positive IntegerValue	32	Day	Current day				Days	RW
Positive IntegerValue	33	Hour	Current time				Hours	RW
Positive IntegerValue	34	Minute	Current minute				Minutes	RW
Positive IntegerValue	35	SetTimezone	Time zone set	36		103		RW
Positive IntegerValue	36	SV_Command	Reset command (1=cancel alarms; 2=reset cylinder production hours, reset after 5 seconds)					RW
Positive IntegerValue	37	SV_SWVer	Software version					RW
Positive IntegerValue	38	SV_OSVer	Operating system version					RW
Positive IntegerValue	39	UnitModel	Unit model					RW
Positive IntegerValue	40	Conductivity_Calc	Inlet water conductivity reading		20	1509		RW
Positive IntegerValue	43	WirelessPrbInfo_1. BattLev	Wireless probe 1 - Battery level from 0 to 3600 mV (below 2800 mV the battery level is low)					RW
Positive IntegerValue	44	WirelessPrbInfo_1. RadioSignalLev	Wireless probe 1 - Radio signal level in dBm+100 (8-15 = LOW; 15-30 = MEDIUM, >30 = EXCELLENT)					RW
Positive IntegerValue	47	WirelessPrbInfo_2. BattLev	Wireless probe 2 - Battery level from 0 to 3600 mV (below 2800 mV the battery level is low)					RW
Positive IntegerValue	48	WirelessPrbInfo_ 2.RadioSignalLev	Wireless probe 2 - Radio signal level in dBm+100 (8-15 = LOW; 15-30 = MEDIUM, >30 = EXCELLENT)					RW
Positive IntegerValue	51	WirelessPrbInfo_ 3.BattLev	Wireless probe 3 - Battery level from 0 to 3600 mV (below 2800 mV the battery level is low)					RW

Type	Add.	Variable name	Description	Def.	Min	Max	UoM	Access
Positive IntegerValue	52	WirelessPrbInfo_ 3.RadioSignalLev	Wireless probe 3 - Radio signal level in dBm+100 (8-15 = LOW; 15-30 = MEDIUM, >30 = EXCELLENT)					RW
Positive IntegerValue	55	WirelessPrbInfo_ 4.BattLev	Wireless probe 4 - Battery level from 0 to 3600 mV (below 2800 mV the battery level is low)					RW
Positive IntegerValue	56	WirelessPrbInfo_ 4.RadioSignalLev	Wireless probe 4 - Radio signal level in dBm+100 (8-15 = LOW; 15-30 = MEDIUM, >30 = EXCELLENT)					RW
Positive IntegerValue	57	UnitStatus	Unit status *					RW
Positive IntegerValue	58	WorkHr	Total unit operating hours				Hours	RW
Positive IntegerValue	59	CylWorkHr	Cylinder production hours		0		Hours	RW
Positive IntegerValue	60	NetStatus[1]	Status of network unit 1 *					RW
Positive IntegerValue	61	NetStatus[2]	Status of network unit 2 *					RW
Positive IntegerValue	62	NetStatus[3]	Status of network unit 3 *					RW
Positive IntegerValue	63	NetStatus[4]	Status of network unit 4 *					RW
Positive IntegerValue	64	NetStatus[5]	Status of network unit 5 *					RW
Positive IntegerValue	65	NetStatus[6]	Status of network unit 6 *					RW
Positive IntegerValue	66	NetStatus[7]	Status of network unit 7 *					RW
Positive IntegerValue	67	NetStatus[8]	Status of network unit 8 *					RW
Positive IntegerValue	68	NetStatus[9]	Status of network unit 9 *					RW
Positive IntegerValue	69	NetStatus[10]	Status of network unit 10 *					RW
Positive IntegerValue	70	NetStatus[11]	Status of network unit 11 *					RW
Positive IntegerValue	71	NetStatus[12]	Status of network unit 12 *					RW
Positive IntegerValue	72	NetStatus[13]	Status of network unit 13 *					RW
Positive IntegerValue	73	NetStatus[14]	Status of network unit 14 *					RW
Positive IntegerValue	74	NetStatus[15]	Status of network unit 15 *					RW
Positive IntegerValue	75	NetStatus[16]	Status of network unit 16 *					RW
Positive IntegerValue	76	NetStatus[17]	Status of network unit 17 *					RW
Positive IntegerValue	77	NetStatus[18]	Status of network unit 18 *					RW
Positive IntegerValue	78	NetStatus[19]	Status of network unit 19 *					RW
Positive IntegerValue	79	NetStatus[20]	Status of network unit 20 *					RW
Positive IntegerValue	100	SV_CommandResult	Response to the cylinder production hours reset command (1=ok, 2=failed, 3=invalid command; reset after 5 seconds)					RW
Positive IntegerValue	102	PreMaintWarnThrsh	Set next maintenance pre-alert time	240			Hours	RW
Positive IntegerValue	103	PreMaintWarnThrsh_ Secondary	Set next maintenance pre-alert time, Secondary unit	240			Hours	RW
Positive IntegerValue	104	HiConductAlrmDlyT	Set high conductivity alarm delay	60			Minutes	RW
Positive IntegerValue	105	HiConductWarnThrsh	Set high conductivity warning threshold	1250	20	Hi Conduct AlrmThrsh		RW
Positive IntegerValue	106	HiConductAlrmThrsh	Set high conductivity alarm threshold	1500	HiConduct WarnThrsh	1500		RW
Positive IntegerValue	107	HiConductWarnHyst	Set high conductivity warning threshold hysteresis	25				RW
Positive IntegerValue	108	FoamLevSetPScale	Foam sensor sensitivity (0%-200% - def.100%)	100	0	250		RW
Positive IntegerValue	109	FoamLevSetPScale_Secondary	Foam sensor sensitivity (0%-200% - def.100%), Secondary unit	100	0	250		RW
Positive IntegerValue	110	PartFillsT	Set micro-fill cycle duration	5	1	199	Seconds	RW
Positive IntegerValue	111	PartFillsT_Secondary	Set micro-fill cycle duration on Secondary unit	5	1	199	Seconds	RW
Positive IntegerValue	112	DilDrainCfg.Typ	Drain to dilute mode when micro-fill function active (0 = Disabled; 1 = Daily scheduler; 2 = Periodic)	2	0	2		RW
Positive IntegerValue	115	DilDrainCfg.Periodic DilDrainThrsh	Set number of hours between two periodic drain to dilute cycles if micro-filling mode active	10	1	24	Hours	RW
Positive IntegerValue	116	DilDrainCfg.Daily-Sched[1].Start_h	Drain to dilute - Daily scheduler (Monday) - hours	23	0	23	Hours	RW
Positive IntegerValue	117	DilDrainCfg.Daily-Sched[1].Start_min	Drain to dilute - Daily scheduler (Monday) - minutes	0	0	59	Minutes	RW
Positive IntegerValue	118	DilDrainCfg.Daily-Sched[2].Start_h	Drain to dilute - Daily scheduler (Tuesday) - hours	23	0	23	Hours	RW
Positive IntegerValue	119	DilDrainCfg.Daily-Sched[2].Start_min	Drain to dilute - Daily scheduler (Tuesday) - minutes	0	0	59	Minutes	RW

Type	Add.	Variable name	Description	Def.	Min	Max	UoM	Access
Positive IntegerValue	120	DilDrainCfg.Daily-Sched[3].Start_h	Drain to dilute - Daily scheduler (Wednesday) - hours	23	0	23	Hours	RW
Positive IntegerValue	121	DilDrainCfg.Daily-Sched[3].Start_min	Drain to dilute - Daily scheduler (Wednesday) - minutes	0	0	59	Minutes	RW
Positive IntegerValue	122	DilDrainCfg.Daily-Sched[4].Start_h	Drain to dilute - Daily scheduler (Thursday) - hours	23	0	23	Hours	RW
Positive IntegerValue	123	DilDrainCfg.Daily-Sched[4].Start_min	Drain to dilute - Daily scheduler (Thursday) - minutes	0	0	59	Minutes	RW
Positive IntegerValue	124	DilDrainCfg.Daily-Sched[5].Start_h	Drain to dilute - Daily scheduler (Friday) - hours	23	0	23	Hours	RW
Positive IntegerValue	125	DilDrainCfg.Daily-Sched[5].Start_min	Drain to dilute - Daily scheduler (Friday) - minutes	0	0	59	Minutes	RW
Positive IntegerValue	126	DilDrainCfg.Daily-Sched[6].Start_h	Drain to dilute - Daily scheduler (Saturday) - hours	23	0	23	Hours	RW
Positive IntegerValue	127	DilDrainCfg.Daily-Sched[6].Start_min	Drain to dilute - Daily scheduler (Saturday) - minutes	0	0	59	Minutes	RW
Positive IntegerValue	128	DilDrainCfg.Daily-Sched[7].Start_h	Drain to dilute - Daily scheduler (Sunday) - hours	23	0	23	Hours	RW
Positive IntegerValue	129	DilDrainCfg.Daily-Sched[7].Start_min	Drain to dilute - Daily scheduler (Sunday) - minutes	0	0	59	Minutes	RW
Positive IntegerValue	130	PeriodicDrainThrsh	Set number of production hours between two periodic total drain cycles	10	1	999	Hours	RW
Positive IntegerValue	131	ExtFanDTOn	Set start delay for blower from start of production			600	Seconds	RW
Positive IntegerValue	132	ExtFanDTOff	Set stop delay for blower from end of production	30	0	600	Seconds	RW
Positive IntegerValue	133	EvapCycleNoThrsh_S	Set number of evaporation cycles for drain to dilute if micro-filling mode not active (0=AUTO), Secondary unit	0		MaxEvap CycleNo		RW
Positive IntegerValue	134	FillTScale_Secondary	Secondary unit additional filling time modification setting after reaching green LED level if micro-filling mode not active	100	20	100	Percent	RW
Positive IntegerValue	135	DilDrainTScale_Secondary	Set drain time modification on Secondary unit	100	5	190	Percent	RW
Positive IntegerValue	136	WorkHr_Secondary	Secondary unit total operating hours				Hours	RW
Positive IntegerValue	137	CylWorkHr_Secondary	Secondary unit cylinder production hours		0		Hours	RW
Positive IntegerValue	138	Fan_1_cfg.Hours_Count	Fan 1 operating hours				Hours	RW
Positive IntegerValue	139	WorkHrCntDwn	Time remaining until next maintenance (demineralised water)				Hours	RW
Positive IntegerValue	140	WorkHrCntDwn_120	Time remaining until next maintenance (mains water)				Hours	RW
Positive IntegerValue	142	CylResDate.Year	Cylinder production hours reset date - Year				Years	RW
Positive IntegerValue	143	CylResDate.Month	Cylinder production hours reset date - Month				Months	RW
Positive IntegerValue	144	CylResDate.Day	Cylinder production hours reset date - Day				Days	RW
Positive IntegerValue	145	CylResDate.Hour	Cylinder production hours reset date - Hours				Hours	RW
Positive IntegerValue	146	CylResDate.Minute	Cylinder production hours reset date - Minutes				Minutes	RW
Positive IntegerValue	147	CylResDate_S.Year	Secondary unit cylinder production hours reset date - Year				Years	RW
Positive IntegerValue	148	CylResDate_S.Month	Secondary unit cylinder production hours reset date - Month				Months	RW
Positive IntegerValue	149	CylResDate_S.Day	Secondary unit cylinder production hours reset date - Day				Days	RW
Positive IntegerValue	150	CylResDate_S.Hour	Secondary unit cylinder production hours reset date - Hours				Hours	RW
Positive IntegerValue	151	CylResDate_S.Minute	Secondary unit cylinder production hours reset date - Minutes				Minutes	RW
Positive IntegerValue	152	WorkHrCntDwn_Secondary	Time remaining until next maintenance (demineralised water), Secondary				Hours	RW
Positive IntegerValue	153	WorkHrCntDwn_120_Secondary	Time remaining until next maintenance (mains water), Secondary				Hours	RW
Positive IntegerValue	154	UnitStatus_Secondary	Secondary unit status *					RW
Positive IntegerValue	157	Fan_2_cfg.Hours_Count	Fan 2 operating hours				Hours	RW
Positive IntegerValue	158	Fan_3_cfg.Hours_Count	Fan 3 operating hours				Hours	RW
Positive IntegerValue	159	OSVersion[1]	Operating system version (major release)					RW
Positive IntegerValue	162	Conductivity_Secondary	Inlet water conductivity reading Secondary unit		20	1509		RW

Tab. 15.d

* (0 = standby, 1 = production, 2 = alarm, 3 = off from BMS, 4 = off from scheduler, 5 = off from din, 6 = off from display, 7 = ready for backup, 8 = manual mode, 9 = warning, 10 = preheat, 11 = start preheat, 12 = autotest, 13 = manual drain, 14 = thermal shock, 15 = inactivity drain, 16 = foam drain, 17 = heaters off, 18 = awaiting fill, 19 = periodic drain, 20 = pre-purge, 21 = frost prot., 22 = calibration, 23 = ignition 24 = off from monitoring)

** (0 = startup; 10 = init; 20 = autotest 1; 30 = autotest 2; 40 = autotest 2 wait; 50 = autotest 3; 60 = autotest 4; 70 = standby; 80 = production; 90 = fill; 100 = drain; 110 = foam drain; 120 = shutdown alarm; 130 = alarm; 140 = special drain; 150 = manual mode; 160 = init. fill; 170 = fill; 180 = autotest r start; 190 = thermal shock drain; 200 = thermal shock fill; 210 = autotest r start.; 220 = autotest r init.; 230 = autotest r init. drain; 240 = autotest r stop init. drain; 250 = autotest r fill 1; 260 = autotest r fill 2; 270 = autotest r awaiting; 280 = autotest r drain 1; 290 = autotest r drain 2; 300 = autotest r end; 310 = defaults)

*** (1 = running; 2 = pre-purge; 3 = manual; 4 = alarm 5 = calibration; 6 = off; 7 = startup pre-purge; 8 = starting)

16. ALARM TABLE

Any active alarms will be shown on the corresponding screen with direct access from the display. The Alarm icon starts flashing; pressing the Alarm button once displays the type of alarm. In the event of potentially dangerous alarms, the humidifier automatically stops steam production.
For certain alarm events, as well as the alarm signal, the alarm relay is activated (see the Alarm table). When the cause of the alarm is no longer present:

- the alarm is reset automatically or manually: the humidifier starts again and the alarm relay is deactivated;
- the message shown on the display can only be cleared manually.

Even if no longer active, the alarm status continues to be indicated until "reset display" button is pressed. Alarms that are still active cannot be reset. If there is more than one alarm, the display shows the entire list. From the alarm screen, the alarm log can be displayed ("Enter" on displays with keypad).

P/N	Alarm	Cause	Possible solution	Reset	Action
ALC01	Autotest failed (unit shutdown)	Probable problems with: Feedwater, level control, fill solenoid valve **Notice:** check the alarm log for any warnings relating to the events that generated the alarm (autotest warning, level sensor warning, low production warning)	• Make sure that the unit receives water • Switch the unit off and clean the level control and the fill valve	Restart required	Total shut-down
ALW03	High conductivity warning	High water conductivity warning	• Check feedwater conductivity • If necessary, feature a suitable water treatment system • The problem cannot be solved by softening the feedwater	Manually reset the warning	Signal only
ALC02	High conductivity (unit shutdown)	High feedwater conductivity alarm	• Switch the unit off and clean the electrodes that measure the water conductivity • If the problem persists, change the origin of the feedwater or use a suitable treatment system (demineralisation, even partial) • The problem cannot be solved by softening the feedwater		Closed
ALC03	Level sensor blocked (unit showdown)	The level sensor may not be working correctly	• Switch the unit off and clean the boiler, the level sensor and the fill solenoid valve • Check correct water supply to the boiler;	Restart required	Total shut-down
ALB01	No water	No feedwater	• Check that the supply pipe to the humidifier and the internal tubing are not blocked or choked and that there is enough pressure (0.1-0.8 MPa, 1-8 bars) • Check operation of the fill solenoid valve • Check that there is not excessive back-pressure in the steam outlet, preventing water from entering the boiler due to gravity • Check that the steam outlet hose is not choked or that there are no pockets of condensate • Check that the level sensor is working correctly, clean if necessary	Manual / Automatic	Stop production
ALB02	Low production	Input power not available; with the unit on, there is no steam production or water preheating; flue gas outlet or air intake blocked; gas shut-off valve closed, burner and/or controller malfunction	• check the gas pressure and that the gas shut-off valve is open; • make sure that the air intake is not blocked; • check the fan power connection; • check operation of the brushless fan, the flue gas outlet and air intake; • burner flame malfunction; • check the connections between the flame control board and the burner, and between the electrical panel and the flame control; • check the connections between the unit controller and the intermediate terminal block in the electrical panel	Manual	Stop production
ALA01	Main probe broken or disconnected	Main room probe not connected or damaged	• Check probe connection and the type of control selected	Manual	Stop production
ALA02	Limit probe broken or disconnected	Limit probe or second probe not connected or damaged	• Check probe connection and the type of control selected	Manual	Stop production
ALA03	Preheating probe broken or disconnected	NTC water temperature probe not connected or damaged	• Check preheating operation and the settings of the parameters on screen Eb02;	Automatic	Stop production
ALH01	High humidity/temperature (main probe)	High humidity in the room (high temperature with temperature control)	• Check operation of the probe and the limits set on screen c01	Automatic	Signal only
ALH02	Low humidity/temperature (main probe)	Low humidity in the room	• Check operation of the probe and the limits set on screen c01	Automatic	Signal only
ALH03	High humidity/temp. (limit probe)	High humidity at outlet	• Check the operation of the outlet limit probe	Automatic	Signal only

P/N	Alarm	Cause	Possible solution	Reset	Action
ALW01	Foam warning	Entrainment of foam in the boiler during boiling	• The entrainment of foam is generally due to the presence of surfactants in the water (lubricants, solvents, detergents, water treatment or softening agents) or an excessive concentration of dissolved salts. • Purge the feedwater lines • Clean the boiler	Automatic	Signal only
ALT01	Maintenance request	Planned maintenance reminder	• Stop the unit and carry out complete maintenance on the humidifier, then reset the "boiler operating hours" counter (screen Ea07)	Automatic (reset operating hours)	Signal only Unit shutdown in relation to water hardness.
ALW02	Boiler full	Boiler full of water to the high level sensor on the cover, without humidification request	• Check the fill valve for leaks; • Check whether the high level sensor is dirty; • Check that there is no condensate return along the steam hose;	Automatic	Signal only
ALA04	Conductivity meter	Conductivity meter not connected	• Check the connection of the conductivity meter for measuring feedwater conductivity	Manual	Stop production
ALR01	Retain memory error	Problem in the electronic controller	• Replace the controller	Automatic	Signal only
ALP01-4	Wireless probe 1-4 offline	No communication with probe 1-4	• Check binding between probe and access point, check the battery. Check the probe signal level.	Automatic	Signal only
ALM01	Model not set	Model not set	• Set a model	Automatic when the model is selected	Stop production
ALN01-20	Network: problem with unit 1-20	Network unit alarm (see the unit specified for details)	• Carry out the checks according to the alarm • displayed on the unit in question	Automatic	Signal only
ALP05-8	Warning: low battery level on wireless probe 1-4	Battery discharged on wireless probe 1-4	• Check battery charge, replace if necessary;	Automatic	Signal only
ALA05	Main wireless probes Wireless probes	All the main wireless probes are not working	• Check probe connections and binding to the access point	Stop - automatic	Stop production
ALA06	Limit sireless probes Wireless probes	All the limit wireless probes are not working	• Check probe connections and binding to the access point	Stop - automatic	Stop production
ALP09	High boiler temperature	The boiler temperature read by the NTC probe is too high > 110°C	• Check that there is water in the boiler; • check that the level sensor is working and/or clean it	Stop with manual reset	Stop production
ALA07-09	Overload on fan 1-3	Thermostat activated due to abnormal overheating of the boiler from operation without water	• Stop the unit and perform complete maintenance on the boiler	Stop with manual reset	Stop production
ALP10-12	Flue gas probe 1-3 broken	flue gas temperature probe 1-3 broken. NTC probe for measuring the flue gas temperature not connected or not working	• Check the probe connections and/or operation	Stop with manual reset	Stop production
ALP13-15	Flue gas temperature 1-3 warning	flue gas temperature probe 1-warning alarm > 175 °C. Excessively high flue gas temperature, boiler full of scale	• Switch the unit off, clean the heat exchanger, • check burner calibration.		
ALP16-18	Flue gas temperature 1-3 alarm	flue gas temperature probe 1-3 alarm > 180 °C. Excessively high flue gas temperature, boiler full of scale	• Switch the unit off, clean the heat exchanger, • check burner calibration	Stop with manual reset	Stop production
ALA10-12	Burner 1-3 no flame alarm	ignition failure on burner 1-3. No flame with production request. with the unit on, there is no steam production or water preheating; flue gas outlet or air intake blocked; gas shut-off valve closed, burner and/or controller malfunction; no gas supply	• Check the gas pressure and that the gas shut-off valve is open; • make sure that the air intake is not blocked; • check the fan power connection; • check operation of the brushless fan, the flue gas outlet and air intake; • burner flame malfunction; • check the connections between the flame control board and the burner, and between the electrical panel and the flame control; • check the connections between the unit controller and the intermediate terminal block in the electrical panel	Stop with manual reset	Stop production
ALA13	Frost protection check components	temperature below 5°C drain water using the pump to protect components on the humidifier	• check the temperature inside and outside of the humidifier. Increase the temperature inside the humidifier by fitting additional heaters where necessary.	Stop with manual reset	Stop production
ALA20-22	Burner 1-3 speed error	Speed fault on burner 1-3	• check the electrical connections between the control board and the fan; if necessary remove the brushless fan and check its operation.	Stop with manual reset	Stop production
ALP24	No secondary model	no model set for Secondary unit.	• Set the model on the Secondary unit	Stop with manual reset	Stop production

P/N	Alarm	Cause	Possible solution	Reset	Action
ALP25	Secondary no water	No feedwater	• Check that the supply pipe to the humidifier and the internal tubing are not blocked or choked and that there is enough pressure (0.1-0.8 MPa, 1-8 bars) • Check operation of the fill solenoid valve • Check that there is not excessive back-pressure in the steam outlet, preventing water from entering the boiler due to gravity • Check that the steam outlet hose is not choked or that there are no pockets of condensate • Check that the level sensor is working correctly, clean if necessary	Stop with manual reset	Stop production
ALM21	Secondary foam alarm	Entrainment of foam in the boiler during boiling	• The entrainment of foam is generally due to the presence of surfactants in the water (lubricants, solvents, detergents, water treatment or softening agents) or an excessive concentration of dissolved salts. Purge the feedwater lines Clean the boiler	Stop with manual reset	Stop production
ALB03	Secondary low production	Input power not available; With the unit on, there is no steam production or water preheating; flue gas outlet or air intake blocked; gas shut-off valve closed, burner and/or controller malfunction	• check the gas pressure and that the gas shut-off valve is open; • make sure that the air intake is not blocked; • check the fan power connection; • check operation of the brushless fan, the flue gas outlet and air intake; • burner flame malfunction; • check the connections between the flame control board and the burner, and between the electrical panel and the flame control; • check the connections between the unit controller and the intermediate terminal block in the electrical panel		
ALC05	Secondary unit level sensor	The level sensor may not be working correctly	• Switch the unit off and clean the boiler, the level sensor and the fill solenoid valve Check correct water supply to the boiler;	Stop with manual reset	Stop production
ALC06	Autotest failed alarm on Secondary	Probable problems with: Feedwater, level control, fill solenoid valve **Notice:** check the alarm log for any warnings relating to the events that generated the alarm (autotest warning, level sensor warning, low production warning)	• Make sure that the unit receives water • Switch the unit off and clean the level control and the fill valve		
ALW12	Secondary boiler alarm	Boiler full of water to the high level sensor on the cover, without request for humidification	• Check the fill valve for leaks; • Check whether the high level sensor is dirty; • Check that there is no condensate return along the steam hose;		
ALC07	Secondary unit high conductivity	High feedwater conductivity alarm	• Switch the unit off and clean the electrodes that measure the water conductivity • If the problem persists, change the origin of the feedwater or feature a suitable treatment system (demineralisation, even partial) • The problem cannot be solved by softening the feedwater	Stop with manual reset	Stop production
ALA18	Secondary unit preheating probe	NTC water temperature probe not connected or damaged	• Check preheating operation and the settings of the parameters on screen Eb02;	Stop with manual reset	Stop production
ALA19	Secondary unit conductivity probe	Conductivity meter not connected or damaged	• Check the connection of the conductivity meter for measuring feedwater conductivity	Stop with manual reset	Stop production
ALR02	Retain memory on Secondary	Problem in the electronic controller	• Replace the controller		
ALA23	Frost protection force drain on Secondary	temperature below 5°C, water drained using the pump to protect the humidifier	• Check the temperature inside and outside of the humidifier. Increase the temperature inside the humidifier by fitting heaters where necessary	Stop with manual reset	Stop production
ALW04	Warning: Autotest	Probable problems with: Feedwater, level control, fill solenoid valve **Notice:** check the alarm log for any warnings relating to the events that generated the alarm (autotest warning, level sensor warning, low production warning)	• Make sure that the unit receives water • Switch the unit off and clean the level control and the fill valve		Signal only
ALW05	Warning: Level sensor fault	The level sensor may not be working correctly	• Switch the unit off and clean the boiler, the level sensor and the fill solenoid valve Check correct water supply to the boiler;		Signal only
ALW06	Warning: Low production	Input power not available; With the unit on, there is no steam production or water preheating; flue gas outlet or air intake blocked; gas shut-off valve closed, burner and/or controller malfunction	• Check the gas pressure and that the gas shut-off valve is open; • make sure that the air intake is not blocked; • check the fan power connection; • check operation of the brushless fan, the flue gas outlet and air intake; • burner flame malfunction; • check the connections between the flame control board and the burner, and between the electrical panel and the flame control; • check the connections between the unit controller and the intermediate terminal block in the electrical panel		Signal only
ALA14	Secondary unit offline	Secondary unit offline	-		

P/N	Alarm	Cause	Possible solution	Reset	Action
ALA15	Main unit offline	Main unit offline	-		
ALA16	Frost protection force pre-heating	Frost protection Temperature below 10°C, preheating activated to protect the humidifier	• check the temperature inside and outside of the humidifier. Increase the temperature inside the humidifier by fitting heaters where necessary		
ALA17	Frost protection Secondary unit force preheating	Frost protection on Secondary unit. Temperature below 10°C, preheating activated to protect the humidifier	• check the temperature inside and outside of the humidifier. Increase the temperature inside the humidifier by fitting additional heaters where necessary.		
ALP21	SV offline	Supervisor offline			
ALW07	Warning Autotest Secondary	Autotest warning on Secondary unit. Probable problems with: Feedwater, level control, fill solenoid valve **Notice:** check the alarm log for any warnings relating to the events that generated the alarm (autotest warning, level sensor warning, low production warning)	• Make sure that the unit receives water • Switch the unit off and clean the level control and the fill valve		Signal only
ALW09	Warning Autotest cancelled	Autotest stopped manually			Signal only
ALW10	Level sensor warning on Secondary	Level sensor warning on Secondary unit. The level sensor may not be working correctly	• Switch the unit off and clean the boiler, the level sensor and the fill solenoid valve • Check correct water supply to the boiler;		Signal only
ALW11	Low production warning on Secondary	Low production warning on Secondary unit. Input power not available; With the unit on, there is no steam production or water preheating; flue gas outlet or air intake blocked; gas shut-off valve closed, burner and/or controller malfunction	• check the gas pressure and that the gas shut-off valve is open; • make sure that the air intake is not blocked; • check the fan power connection; • check operation of the brushless fan, the flue gas outlet and air intake; • burner flame malfunction; • check the connections between the flame control board and the burner, and between the electrical panel and the flame control; • check the connections between the unit controller and the intermediate terminal block in the electrical panel		Signal only

Tab. 16.a

17. MAINTENANCE

DANGER: always wear protective gloves during maintenance operations.

DANGER: poor maintenance, removal or modification of safety devices and/or the use of non-original spare parts can cause serious or fatal injuries to operators or third parties and humidifier malfunctions.

DANGER: before all operations:
- disconnect the humidifier from the mains power supply;
- close the water supply and gas shut-off valves;
- drain the water circuit using the manual electric pump function or the drain valve provided, after connecting a pipe to drain the water outside of the unit and avoid flooding.

IMPORTANT
- Do not use detergents or solvents to clean the plastic components.
- Descaling can be performed using a 20% acetic acid solution, then rinsing with plenty of water.

17.1 Boiler maintenance

Access the boiler as described in the chapter "Introduction and installation". Remove panels A, B and C as follows (Fig. 17.a):
- detach the steam hose from the boiler;
- undo screws V and V1 (Fig. 17.a);
- undo the internal and external screws that secure panel B (Fig. 17.a);
- remove panels A, B and C (Fig. 17.a).

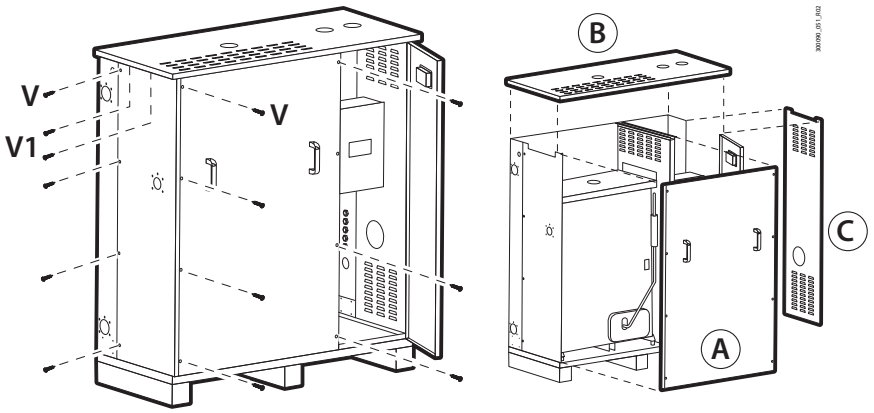

Fig. 17.a

To remove the heat exchanger, proceed as follows:

- disconnect the cables from the burner electrodes (the detection electrode must be disconnected from the burner control board, see the A - Fig. 17.b);
- remove the fan manifold by removing the screws B (Fig. 17.b) and remove the burner combustion head (Fig. 17.c);

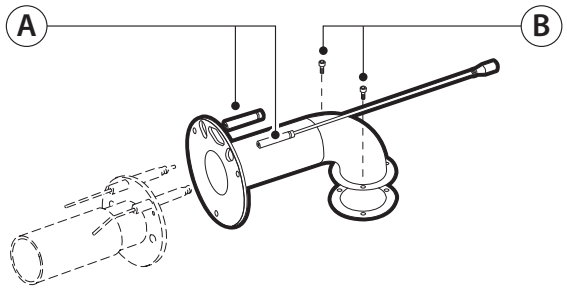

Fig. 17.b

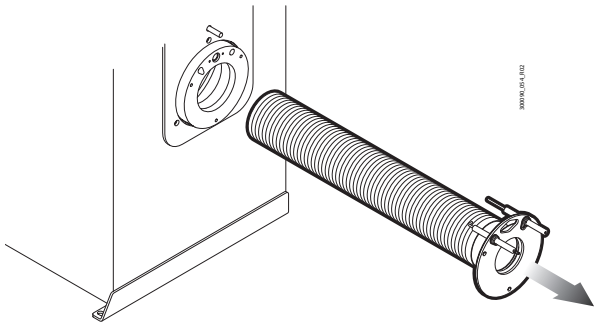

Fig. 17.c

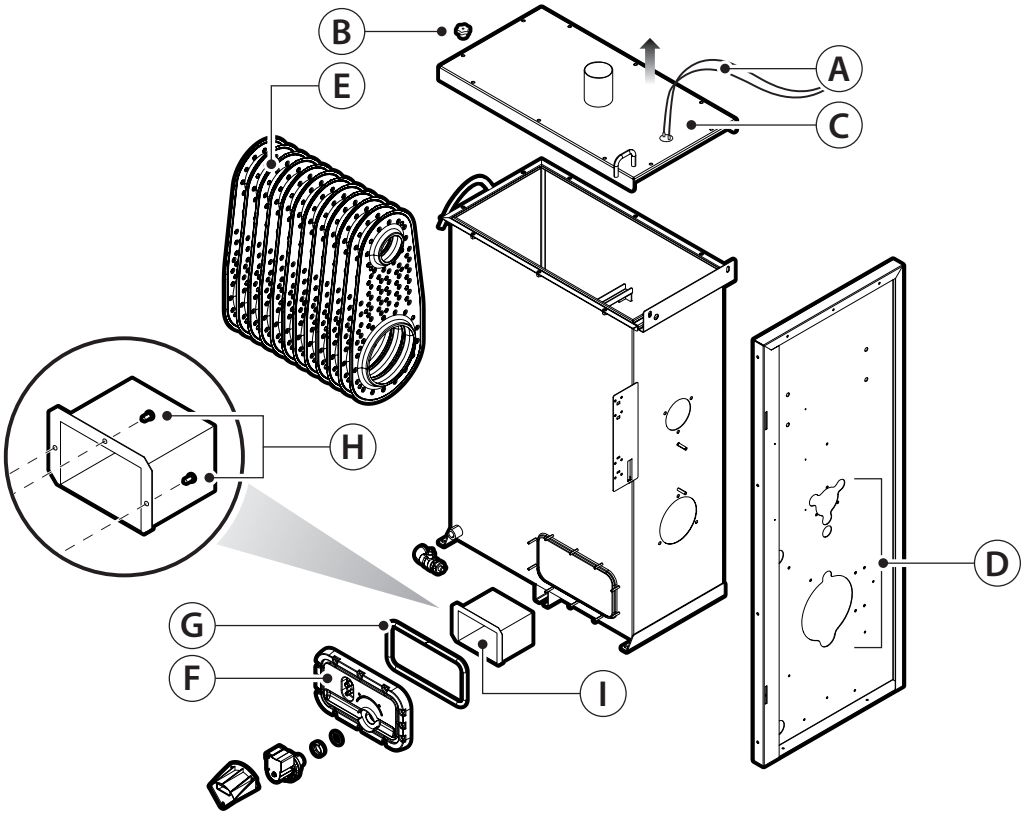

Fig. 17.d

- disconnect the cables from the foam detection electrode (A - Fig. 17.d);
- unscrew and remove the locking nuts (B - Fig. 17.d);
- remove the boiler cover (C - Fig.17.d);
- remove the nuts (D - Fig. 17.d) from the side of the burner;
- take out the heat exchanger (E - Fig. 17.d) and wash it using a 20% acetic acid solution, removing scale using implements that do not scratch the lining (e.g. wood or plastic). At the end of the process, rinse thoroughly.
- disconnect the power supply cable and all the pipes/hoses connected to the electric pump and the cover (Fig. 17.d);
- undo the panel fastening nuts and remove it, making sure not to damage the gasket (G - Fig. 17.d);
- unscrew and remove the screws H (Fig. 17.d) to release the steel filter (I - Fig. 17.d) and wash it in a 20% acetic acid solution;
- using a wooden or plastic scraper, scrape the inside of the vaporiser chamber.

17.2 Cleaning the burner

The burner must be checked by authorised and qualified personnel once or twice a year, according to use.

Before performing any maintenance on the burner, check its general condition, carrying out the operations listed below:
- remove the burner head (Fig. 17.c) as described previously;
- using a brush, clean the inside of the burner head; make sure not to crush the metal mesh (Fig. 17.e);
- detach all gas and electrical connections from the burner assembly;
- check for dust deposits on the fan and if necessary remove the parts required to clean it (Fig. 17.f).
- clean the fan using a brush (Fig. 17.g).

IMPORTANT: to avoid damaging the fan, never use a jet of compressed air when cleaning it.

When reassembling the parts, check:
- the condition of the gaskets (replace if necessary);
- that the position of the electrodes corresponds to the figure.

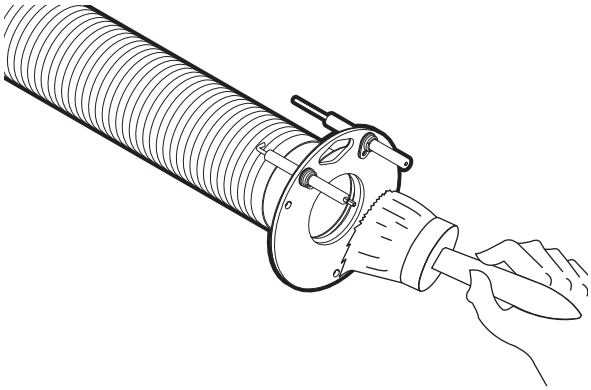

Fig. 17.e

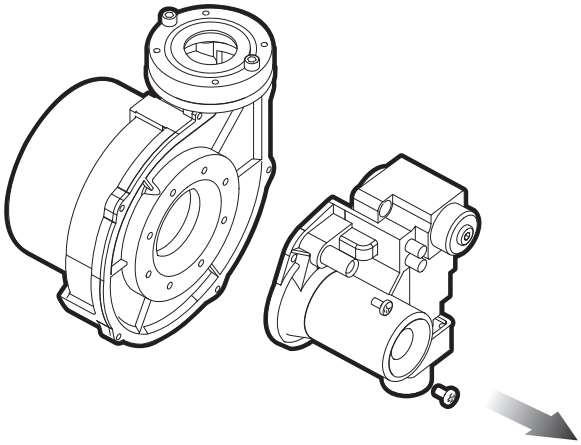

Fig. 17.f

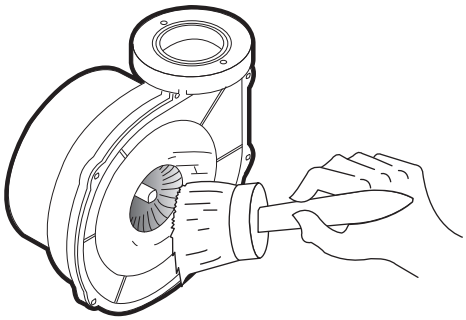

Fig. 17.g

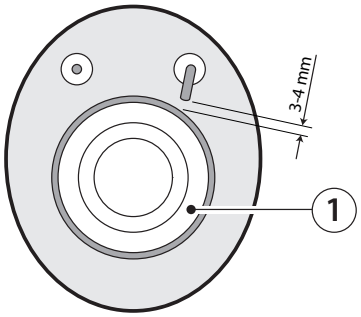

Fig. 17.h

18. GENERAL FEATURES AND MODELS

Models for indoor installation:

INDOOR models	UG045	UG090	UG150	UG180	UG300
rated supply voltage (Vac)	230V 50Hz (ver. UG***HD005) / 115V 60Hz (ver. UG***H1105)				
steam connection (Ø mm)	1x80	1x80	1x80	2x80	2x80
steam outlet pressure limits (Pa)	0-2000 (0-0.30 PSI)				
Feedwater					
connection	384 G				
temperature limits °C (°F)	0-45 (32-113)				
pressure limits (MPa)	0.1-0.8 (1-8 bars) (14.5-166 PSI)				
fill water instant flow-rate (l/min)	18 (4.76 US gal/min)				
Drain water					
connection ø mm (in)	50 (1.97)				
typical temperature °C (°F)	≤100 (212)				
drain water instant flow-rate (l/min) (drain pump only)	32 (8.45 US gal/min)				
drain water instant flow-rate (with drain tempering)	44 l/min (T<60°C) (11.62 US gal/min)				
operating conditions	0 to 45°C (32 to 113°F); 10-90% rH non cond.				
storage conditions	-10 to 70°C (14 to 158°F), 5-95% rH				
protection rating	IP20				
auxiliary voltage / frequency (V - Hz)	24 / 50-60				
instant steam production (kg/h / lbs/h) (1)	45 (100)	90 (200)	150 (330)	180 (400)	300 (660)
power consumption at rated voltage (W)	187	255	309	389	500

Tab. 18.b

(1) average steam production is affected by factors, such as: ambient temperature, water quality, steam distribution system.

Models for outdoor installation:

OUTDOOR models	UG045	UG090	UG150	UG180	UG300	UG450
rated supply voltage (Vac)	230V 50 Hz (ver. UG***YD005) / 115V 60 Hz (version UG***X1105)					
steam connection (Ø mm)	1x80	1x80	1x80	2x80	2x80	3x80
steam outlet pressure limits Pa (PSI)	0-2000 (0-0.30 PSI)					
Feedwater						
connection	3/4 NPT					
temperature limits °C (°F)	0-45 (32-113)					
pressure limits (MPa)	0.1-0.8 (1-8 bars) (14.5-166 PSI)					
fill water instant flow-rate (l/min)	18 (4.76 US gal/min)					
Drain water						
connection ø mm (in)	50 (1.97)					
typical temperature °C (°F)	≤100 (212)					
drain water instant flow-rate (l/min)	32 (8.45 US gal/min)					
operating conditions						
UG***X1105 (UL version)	-40 to 45°C (-40 to 113°F); 10-90% rH non-cond.					
UG***YD005 (CE version)(2)	0 to 45°C (32 to 113°F); 10-90% rH non cond.					
storage conditions	-10 to 70°C (14 to 158°F), 5-95% rH					
protection rating	outdoor IAS 12-94					
auxiliary voltage / frequency (V - Hz)	24 / 50-60					
instant steam production (kg/h / lbs/h) (1)	45 (100)	90 (200)	150 (330)	180 (400)	300 (660)	450 (990)
power consumption at rated voltage W						
UG***X1105 (UL version)	2248	2312	2368	2509	2619	4927
UG***YD005 (CE version)(2)	248	315	368	509	619	927

Tab. 18.c

(1) average steam production is affected by factors, such as: ambient temperature, water quality, steam distribution system.

(2) -25 to 45°C (-13 to 113 °F); 10-90% rH non-cond. optional 1 x 1000 W heater
-40 to 45°C (-40 to 113 °F); 10-90% rH non cond. optional 2 x 1000 W heaters

Controller specifications:

type	c.pHC
auxiliary voltage / frequency (V - Hz)	24 / 50-60
maximum auxiliary power (VA)	90
probe inputs (general specifications)	can be selected for these signals: 0 to 1 Vdc, 0 to 10 Vdc, 2 to 10 Vdc, 0 to 20 mA, 4 to 20 mA
	input impedance: 60 kΩ with signals: 0 to 1 Vdc, 0 to 10 Vdc, 2 to 10 Vdc
	50 Ω with signals: 0 to 20 mA, 4 to 20 mA
power supply for active probes (general specifications)	24 Vdc (24 Vac rectified), Imax= 250 mA
	12 Vdc 5%, Imax= 50 mA
alarm relay outputs (general specifications)	250 V 2 A (2 A)
	type of micro-switching action 1C
remote enabling input (general specifications)	voltage-free contact; max. resistance 50 Ω; Vmax = 24 Vdc; Imax = 5 mA
serial communication	three-wire RS485 / Fieldbus / BMS
USB port	USB type A
Ethernet port	Ethernet

Tab. 18.d

18.1 Heating-water circuit specifications

		UOM	UG045	UG090	UG150	UG180	UG300	UG450
heat input	rated	kW (BTU/h)	33 (112596)	62.5 (213250)	105 (358260)	125 (426500)	210 (7165209)	315 (1074780)
	minimum		7.8 (26614)	14.7 (50156)	24.7 (84276)	14.7 (50156)	24.7 (84276)	24.7 (84276)
heat input	rated		34.8 (118737)	65 (221780)	108 (368496)	130 (443560)	216 (736992)	324 (1105488)
	minimum		8.7 (29684)	16.25 (55445)	27 (92124)	16.25 (55445)	27 (92124)	27 (92124)
rated steam production	rated	kg/h (lbs/h)	45 (100)	90 (200)	150 (330)	180 (400)	300 (660)	450 (990)
	minimum		11.25 (25)	22.5 (50)	37.5 ()	22.5 (50)	37.5 ()	37.5 ()
max steam temp.		°C (°F)	105 (221)	105 (221)	105 (221)	105 (221)	105 (221)	105 (221)
water content in steady operation		l	120	120	200	200	415	615
NOx emissions		class	5(<70 mg/Kwh)	5(<70 mg/Kwh)	6(<56 mg/Kwh)	4 (<100 mg/kWh)	6 (<56 mg/kWh)	6 (<56 mg/kWh)
CO2	natural gas (G20)	% vol	9.4	9.4	9.4	9.4	9.4	9.4
	natural gas (G25)		9.3	9.3	9.3	9.3	9.3	9.3
	propane (G31)		11.2	11.2	--	11.2	--	--
	butane (G30)		11.6	11.6	--	12	--	--
CO		mg/kWh	* <25	* <60	* <60	* <60	* <60	* <60
D. flue gas pipe***		mm	80 (3")	80 (3")	80 (3")	2xØ80 (3")	2xØ80 (3")	3xØ80 (3")
D. air intake pipe***			80 (3")	80 (3")	80 (3")	2xØ80 (3")	2xØ80 (3")	3xØ80 (3")
D. steam hose			1x Ø80	1x Ø80	1x Ø80	2x Ø80	2x Ø80	3x Ø80
natural gas combustion flow-rate (G20) (1)	rated	m3 St/h**	3.68	6.87	11.45	13.4	22.7	34.4
	minimum		0.9	1.75	2.91	1.67	2.85	2.85
natural gas combustion flow-rate (G25) (1)	rated		4.2	8.7	14.6	17.5	29.2	43.8
	minimum		1.02	1.98	3.3	1.98	3.3	3.3
propane combustion flow-rate (G31) (1)	rated		1.43	2.68	--	5.36	--	--
	minimum		0.48	0.68	--	0.68	--	--
butane combustion flow-rate (G30) (1)	rated		1.1	2.06	--	4.12	--	--
	minimum		0.37	0.545	--	0.545	--	--
gas supply pressure for	natural gas (G20)	Pa/mbar/PSI	2000/20/0.29	2000/20/0.29	2000/20/0.29	2000/20/0.29	2000/20/0.29	2000/20/0.29
	natural gas (G25)		2000/20/0.29	2000/20/0.29	2000/20/0.29	2000/20/0.29	2000/20/0.29	2000/20/0.29
	propane (G31)		3000/30/0.44	3000/30/0.44	--	3000/30/0.44	--	--
	butane (G30)		3000/30/0.44	3000/30/0.44	--	3000/30/0.44	--	--
max allowable pressure drop in air intake and flue gas exhaust pipes		Pa/mbar/PSI	90/0.90/0,013	82/0.82/0,012	82/0.82/0,012	95/0.95/0,014	95/0.95/0,014	95/0.95/0,014

Tab. 18.e

* value refers to combustion of natural gas (G20);
** m3St = dry gas at 15°C and 1013.25 mbar atmospheric pressure;
***: using the specific KITNSTALL for USA.

18.2 Technical values of the flue gas according to useful heat input

fuel type	natural gas (G20)			natural gas (G25)			propane (G31)			butane (G30)		
	UG045	UG090	UG180	UG045	UG090	UG180	UG045	UG090	UG180	UG045	UG090	UG180
heat input rated (kW)	34.76	65.00	130.0	34.76	65.00	130.0	34.76	65.00	130.0	34.76	65.00	130.0
heat input rated (BTU/h)	118737	221780	443560	118737	221780	443560	118737	221780	443560	221780	221780	443560
flue gas flow-rate (kg/s)	0.0163	0.0303	0.0606	0.0167	0.03115	0.0623	0.0154	0.0283	0.0566	0.0147	0.0276	0.0551
flue gas temperature °C (°F) (1)	135 (275)	170 (338)	165 (329)	123 (253)	175 (347)	163 (325)	123 (253)	175 (347)	165 (329)	123 (253)	175 (347)	163 (325)
percentage of CO2 in flu gas (%)	9.4	9.4	9.4	9.3	9.3	9.3	11.2	11.4	11.2	11.6	11.6	12

Tab. 18.f

fuel type	natural gas (G20)			natural gas (G25)		
	UG150	UG300	UG450	UG150	UG300	UG450
rated heat input (kW)	108	216	324	108	216	324
rated heat input (BTU/h)	368496	736992	1105488	368496	736992	1105488
flue gas flow-rate (kg/s)	0.048	0.096	0.144	0.0167	0.03115	0.0623
flue gas temperature °C (°F)	172 (342)	168 (334)	165 (329)	172 (342)	168 (334)	165 (329)
CO2 percentage in flue gas (%)	9.4	9.4	9.4	9.3	9.3	9.3

Tab. 18.g

(1)**Note:** referred data during the certification phase according to the reference regulations.

Flue gas condensate flow
UG INDOOR version

Conditions:

External air temperature (° C)	°C	1
Flue duct diameter	mm	80
Flue pipe length	m	10
UG Model	Steady condition	
	l/h	
UG 045	0,6 - 0,8	
UG 090	1,0 - 1,3	
UG 180	1,9 - 2,6	

Conditions:

External air temperature (° C)	°C	1
Flue duct diameter	mm	100
Flue pipe length	m	10
UG Model	Steady condition	
	l/h	
UG 045	0,7 - 1,0	
UG 090	1,1 - 1,4	
UG 180	2,2 - 2,8	

Conditions:

External air temperature (° C)	°C	1
Flue duct diameter	mm	100
Flue pipe length	m	10
UG Model	Steady condition	
	l/h	
UG 150	1,9 - 2,6	
UG 300	3,7 - 5,1	

Note: values referred to thermal conditions, in the start-up phase the values can be up to 5-6 times higher.
Values refer to operation with natural gas / methane

19. ANNEX

Annex A: wiring and connection diagrams

Electrical panel

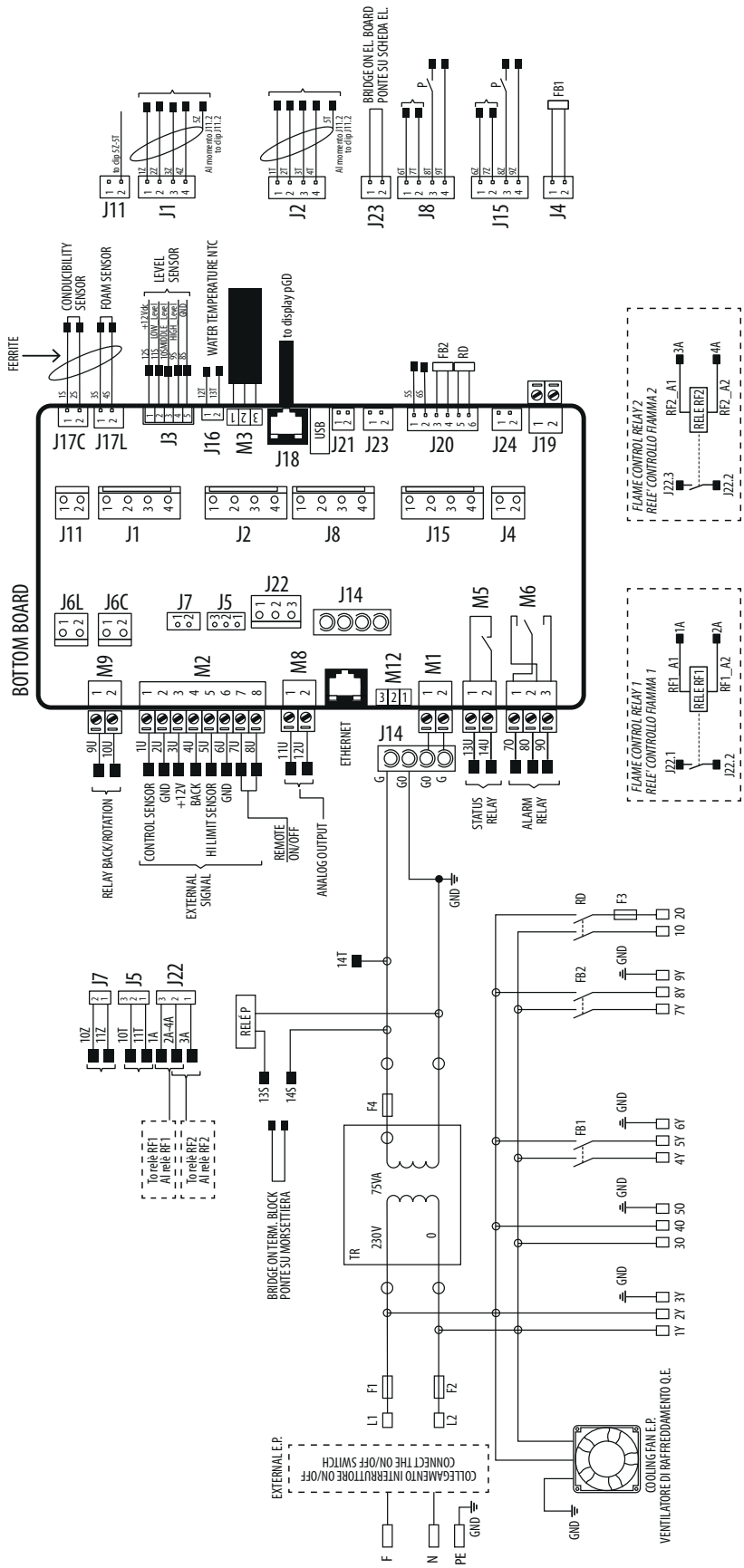

Fig. 19.a

Wiring diagram for UG045 - UG090 - UG150

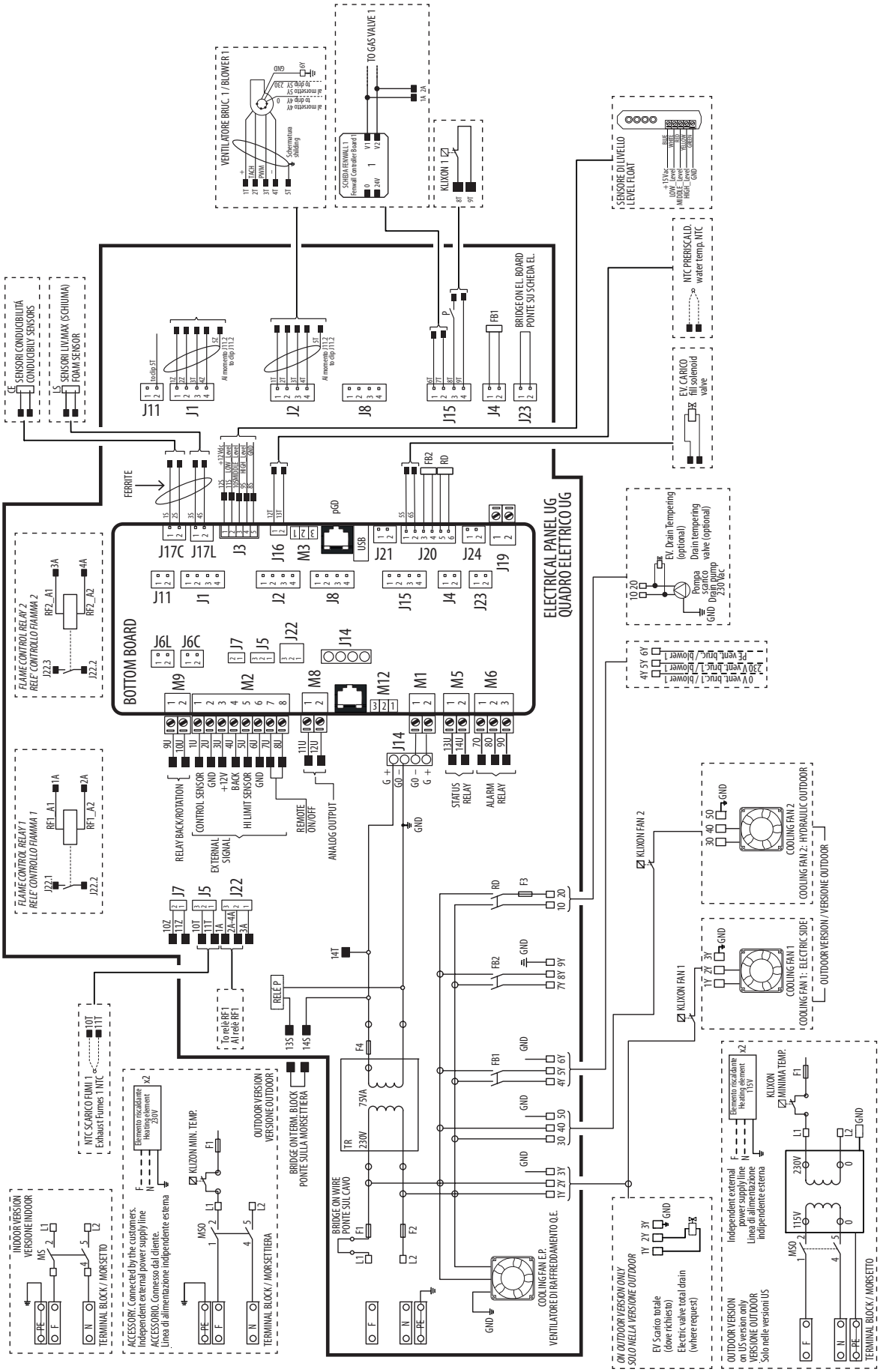

Fig. 19.b

Wiring diagram for UG180 - UG300

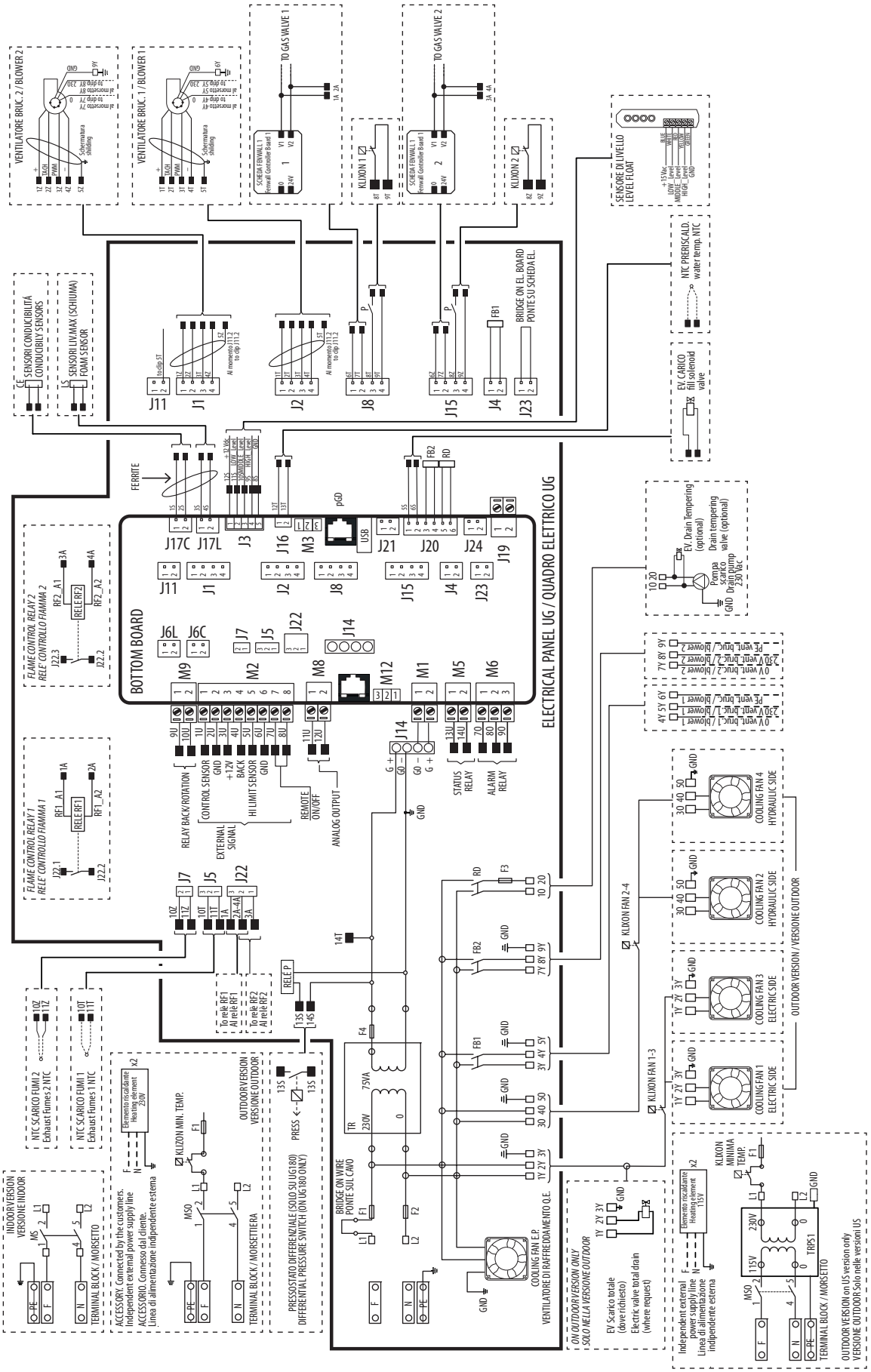

Fig. 19.c

Wiring diagram for UG450

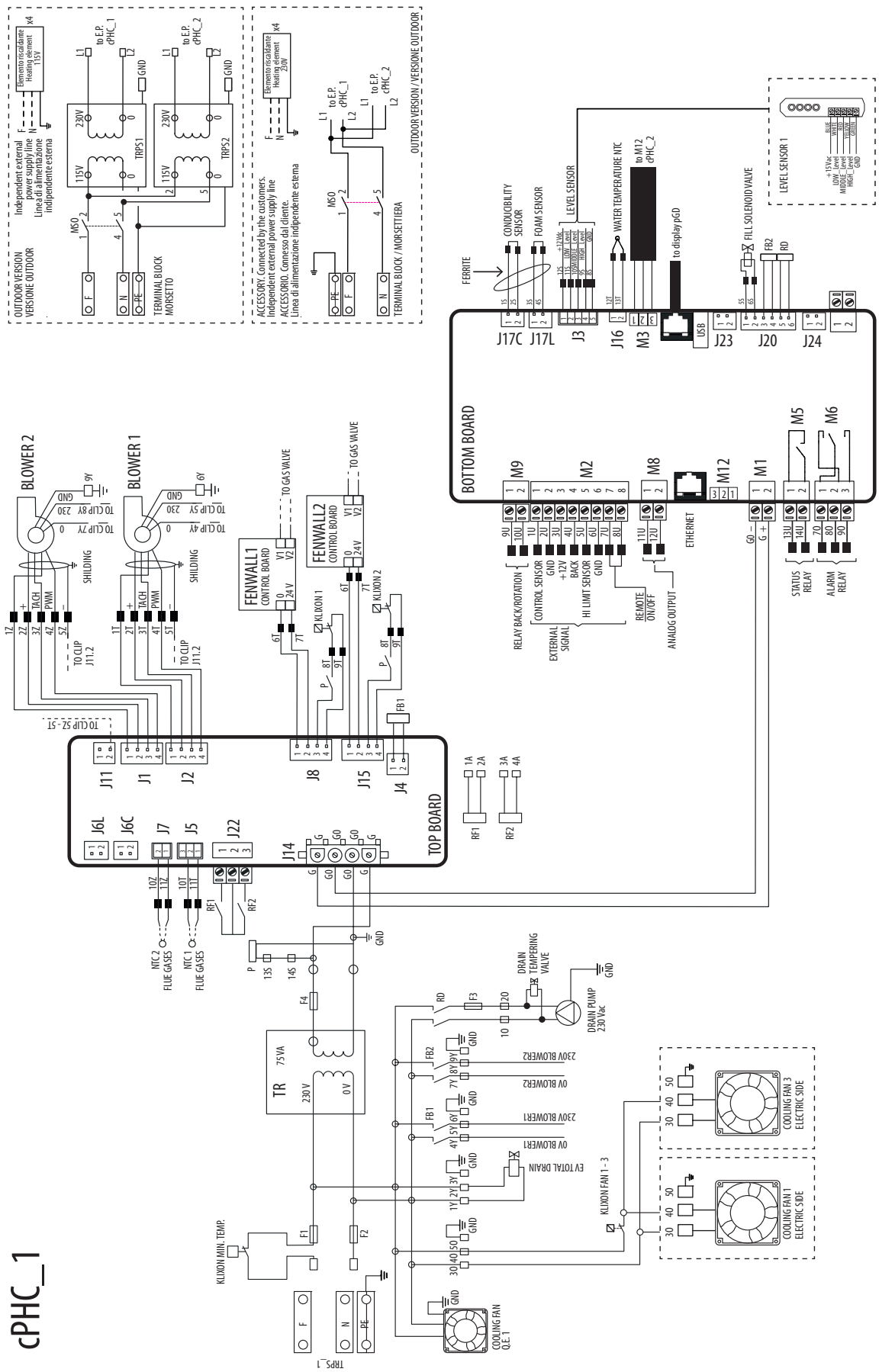

Fig. 19.d

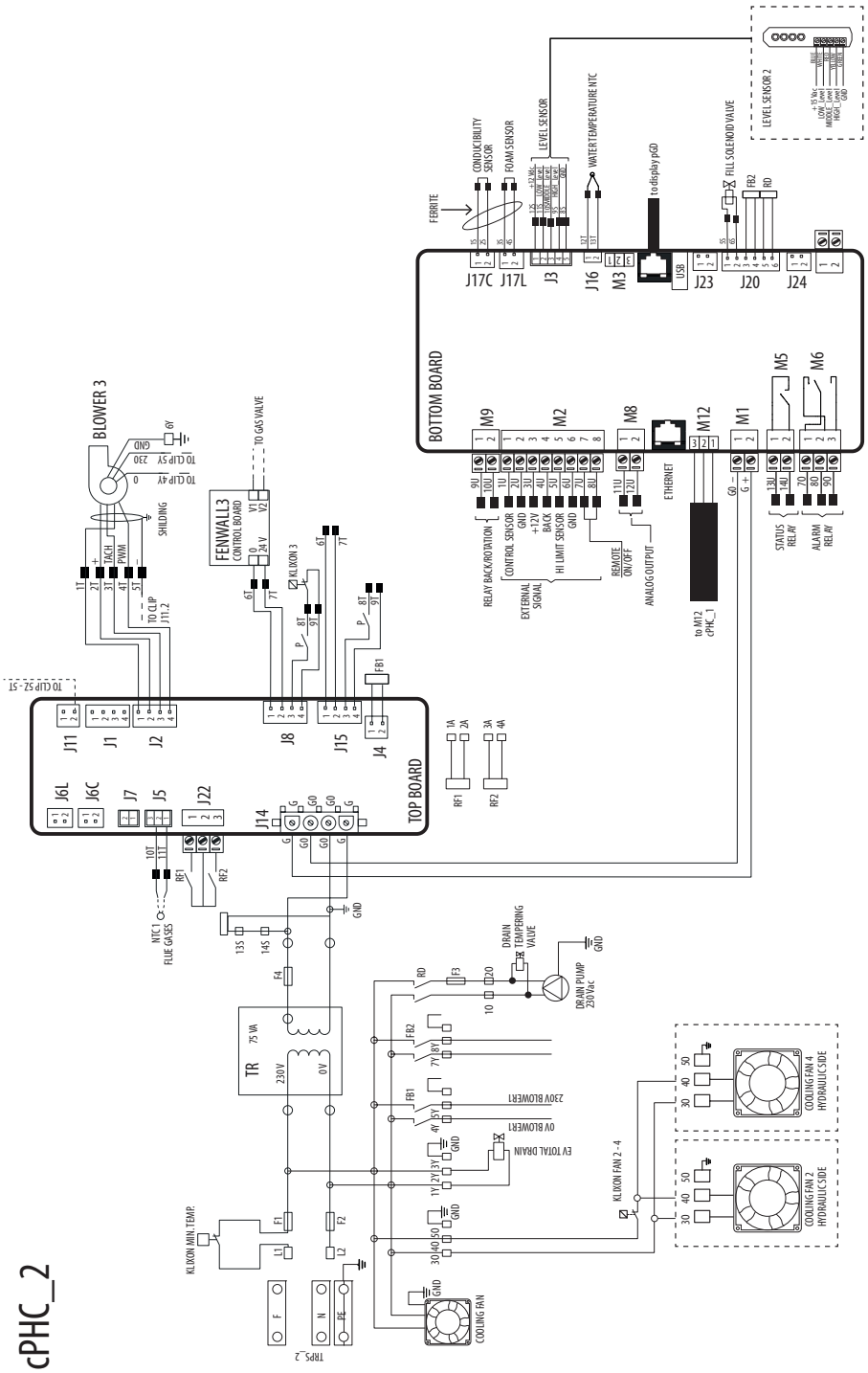

Fig. 19.e

Wiring diagram key

Ref.	Description
Base	Selectable fuse carrier
cPHC	Main board + expansion card
P	Differential pressure switch (180/300/450 kg/h)
AL	3-pin through connector
A	4-pin through connector
Klixon 1/2/3	Safety thermostat
TRPS1	115-230 V transformer (UG45-90-150)
U-T-S	14-pin through connector
Z	14-pin through connector
Y-O	4-pin through connector
MSO	ON/OFF switch (outdoor)

Ref.	Description
MS	Two-pole ON/OFF switch
K.MINIMA	Safety thermostat (outdoor only)
TRPS2	115-230 V transformer (UG180-300)
F1-F2	Power fuses
F3	Pump fuse
RD	Pump control relay
FB1-FB2	Burner fan control relay
P	Pressure switch control relay
RF1-RF2	Flame control relay 1-2
L1-L2-GROUND	Input terminals

Tab. 19.h

Electrical panel

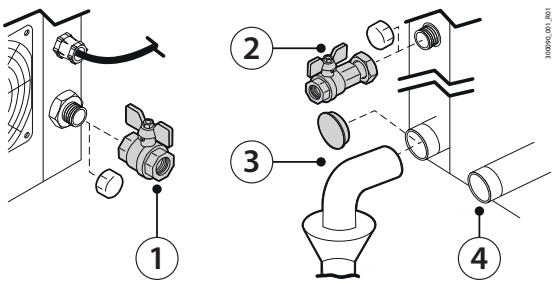

Fig. 19.f

Annex B: Accessories and spare parts kits

1 Water circuit

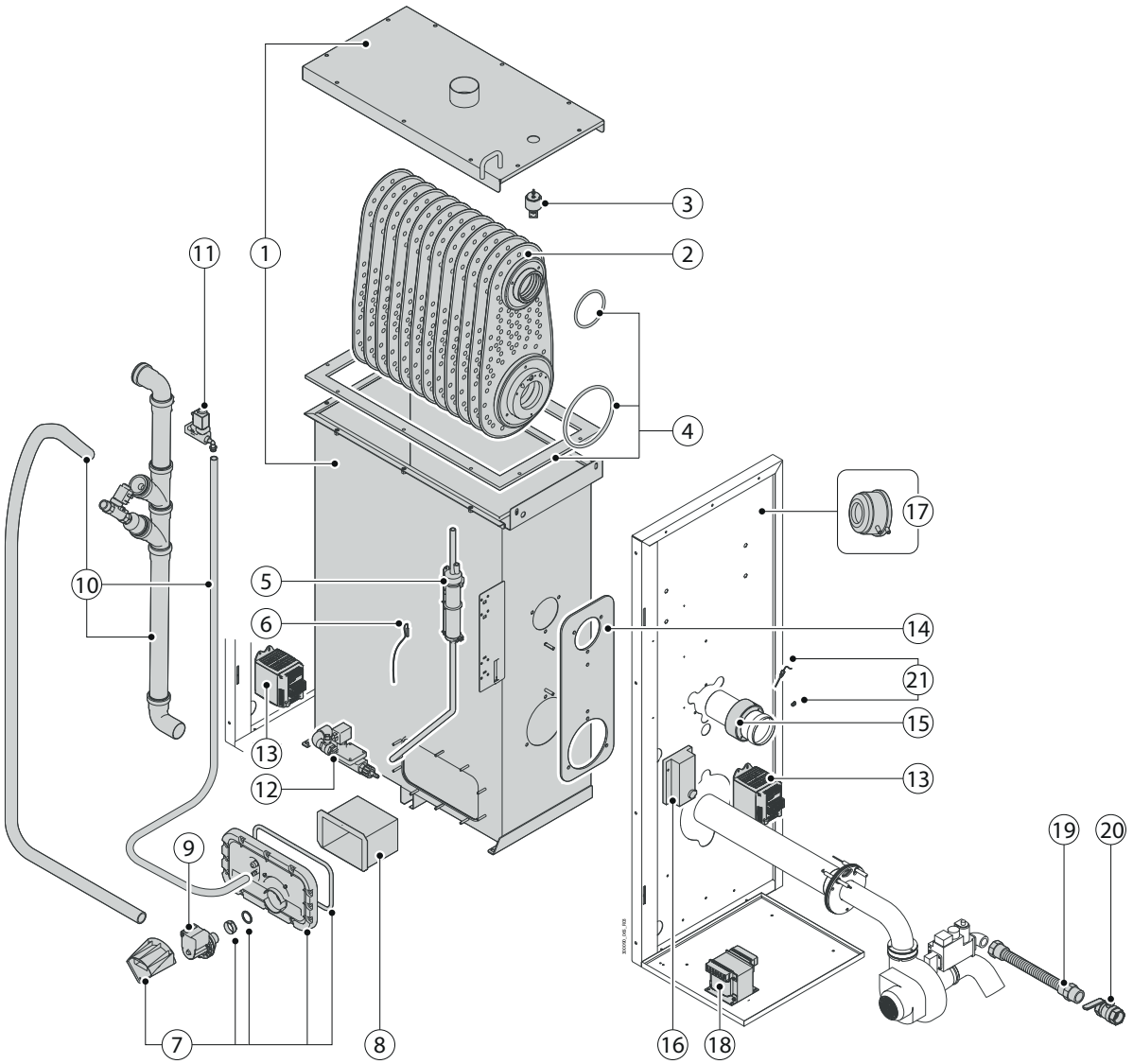

Fig. 19.g

Key:

Part number	Description	Ref. figure	Quantity per humidifier
UGKBL00091SP	UG45-90 "boiler + cover + nuts" kit	1	
UGKBL00181SP	UG180 "boiler + cover + nuts" kit	1	
UGKBL000C6SP	UG150 "boiler + cover + nuts" kit	1	
UGKBL0004CSP	UG300 "boiler + cover + nuts" kit	1	
UGKSC00001SP	stainless steel heat exchanger kit for UG045	2	
UGKSC00002SP	stainless steel heat exchanger kit for UG090/180	2	
UGKSC00003SP	stainless steel heat exchanger kit for UG150/300/450	2	
URKFS00000SP	foam sensor assembly	3	
UGKGUAH190SP	water gasket kit UG045-90 + o-rings	4	
UGKGUAH182SP	water gasket kit UG180 + o-rings	4	
UGKGUAH1C5SP	water gasket kit UG150 + o-rings	4	
UGKGUAH13CSP	water gasket kit UG300 + o-rings	4	
UGKSL00002SP	level sensor kit	5	
NTC030HT00SP	NTC probe	6	
URKFLAN000SP	flange assembly	7	
URKF0000XLSP	filter kit	8	
UGKDP00050SP	drain pump kit UG45/90/150 (50 Hz)	9	
UGKDP00060SP	drain pump kit UG45/90/150 (60 Hz)	9	
UGKDP30050SP	drain pump kit UG180/300 (50 Hz)	9	
UGKDP30060SP	drain pump kit UG180/300 (60 Hz)	9	
UGKP000004SP	drain pipes and column kit	10	
UGKEVIND00SP	fill valve kit for indoor unit	11	
UGKEVOUT00SP	fill valve kit for outdoor unit	11	
UGKEVDRN01SP	drain solenoid valve kit for outdoor unit 230V 50/60 Hz	12	
UGKH2301KWSP	heater kit 230V 1 kW	13	
UGKH1151KWSP	heater kit 115V 1 kW	13	
UGKCP00000SP	backing plate kit for UG	14	
UGKGF00000SP	chimney attachment kit for UG	15	
UGKB10000MSP	flame control board + bracket kit	16	
UGKPRES180SP	pressure switch kit for UG180	17	
UGKT400115SP	transformer kit 400VA - PRI115V-SEC230V	18	
UGKT650115SP	transformer kit 650VA - PRI115V-SEC230V	18	
UGKPIPE001SP	gas connection pipe kit UG 45-90	19	
UGKPIPE002SP	gas connection pipe kit UG150-300	19	
UGKPIPE003SP	gas connection pipe kit UG 180	19	
UGKTAP0090SP	gas ball valve UG045/090/150 (1 inch)	20	
UGKTAP0180SP	gas ball valve UG180/300/450 (1-1/4 inch)	20	
UGKT000150SP	NTC probe + unit safety thermostat kit	21	

Tab. 19.i

2 Burner assembly

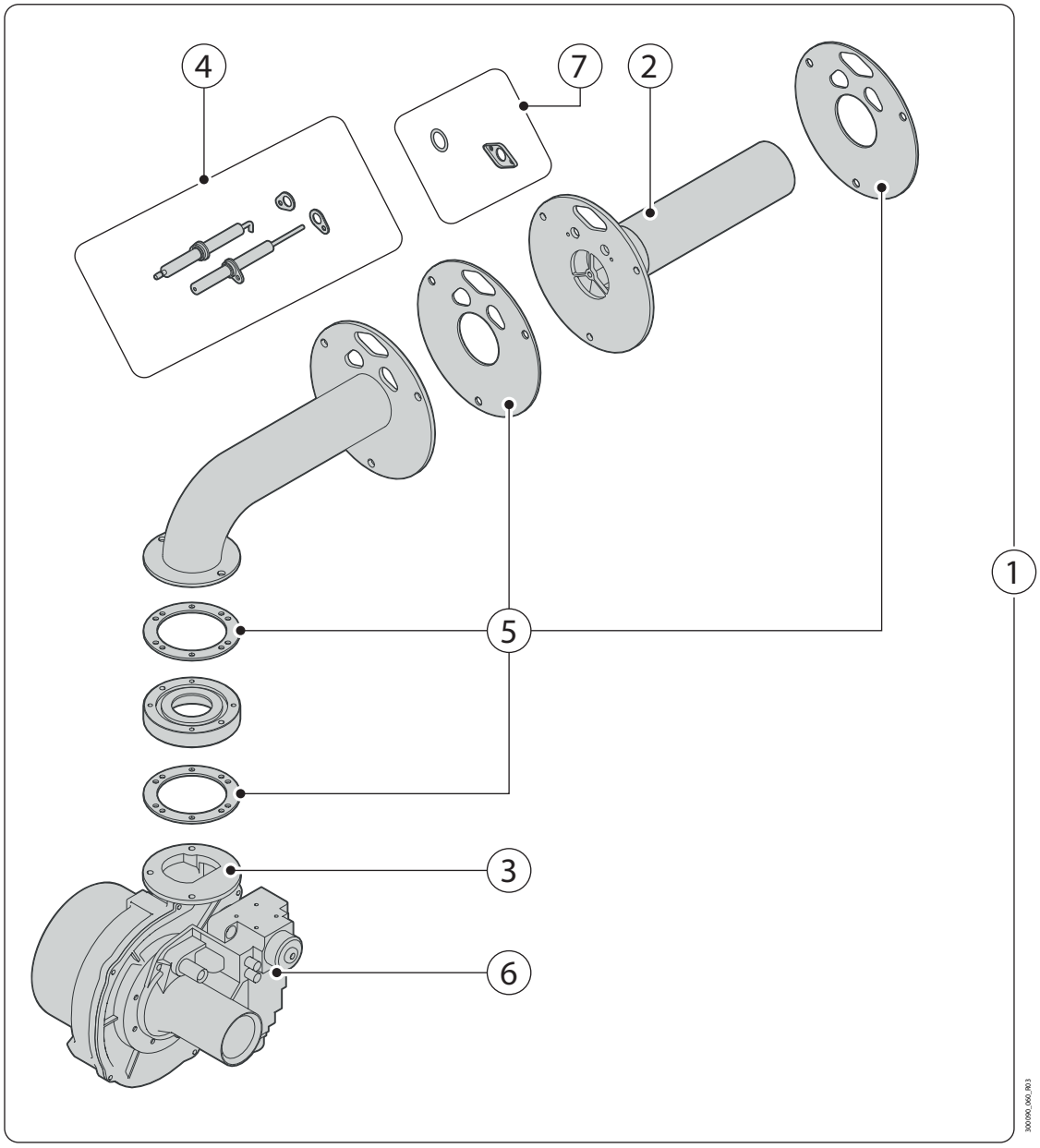

Fig. 19.h

Part number	Description	Ref. figure	Quantity per humidifier
UGKBRUC445SP	combustion assembly kit. assembled and calibrated - UG045	1	
UGKBRUC490SP	combustion assembly kit. assembled and calibrated - UG090-180	1	
UGKBRUC2C5SP	combustion assembly kit, assembled and calibrated - UG150-300-450 50Hz	1	
UGKBRUC3C5SP	combustion assembly kit, assembled and calibrated - UG150-300-450 60Hz	1	
UGKCH00045SP	combustion head for UG45	2	
UGKCH00090SP	combustion head for UG90-180	2	
UGKCH000C5SP	combustion head for UG150-300-450	2	
UGKFC00045SP	burner fan kit for UG045	3	
UGKFC00090SP	burner fan kit for UG090	3	
UGKFC000C5SP	burner fan kit for UG150	3	
UGKFLAM045SP	ignition / flame detection electrodes + cable + gaskets UG45	4	
UGKFLAM090SP	ignition / flame detection electrodes + cable + gaskets UG90-180-150-300	4	
UGKGUAG045SP	gas gasket kit for UG045	5	
UGKGUAG090SP	gas gasket kit for UG090-180-150-300	5	
UGKVG00045SP	Honeywell valve VK8115F1076U + venturi UG45	6	
UGKVG00090SP	Honeywell valve VK8115F1134B + venturi UG90 / UG180	6	
UGKVG000C5SP	Honeywell valve VR8615VB1002B (24V-50Hz) + venturi UG150 / UG300 / UG450	6	
UGKVG001C5SP	Honeywell valve VR8615VB1036B (24V-60Hz) + venturi UG150 / UG300 / UG450	6	
UGKGLASS00SP	electrode + heat exchanger glass kit UG45	4+7	
UGKGLASS01SP	electrode + heat exchanger glass kit UG90-150-180-300-450	4+7	

3 Electrical panel

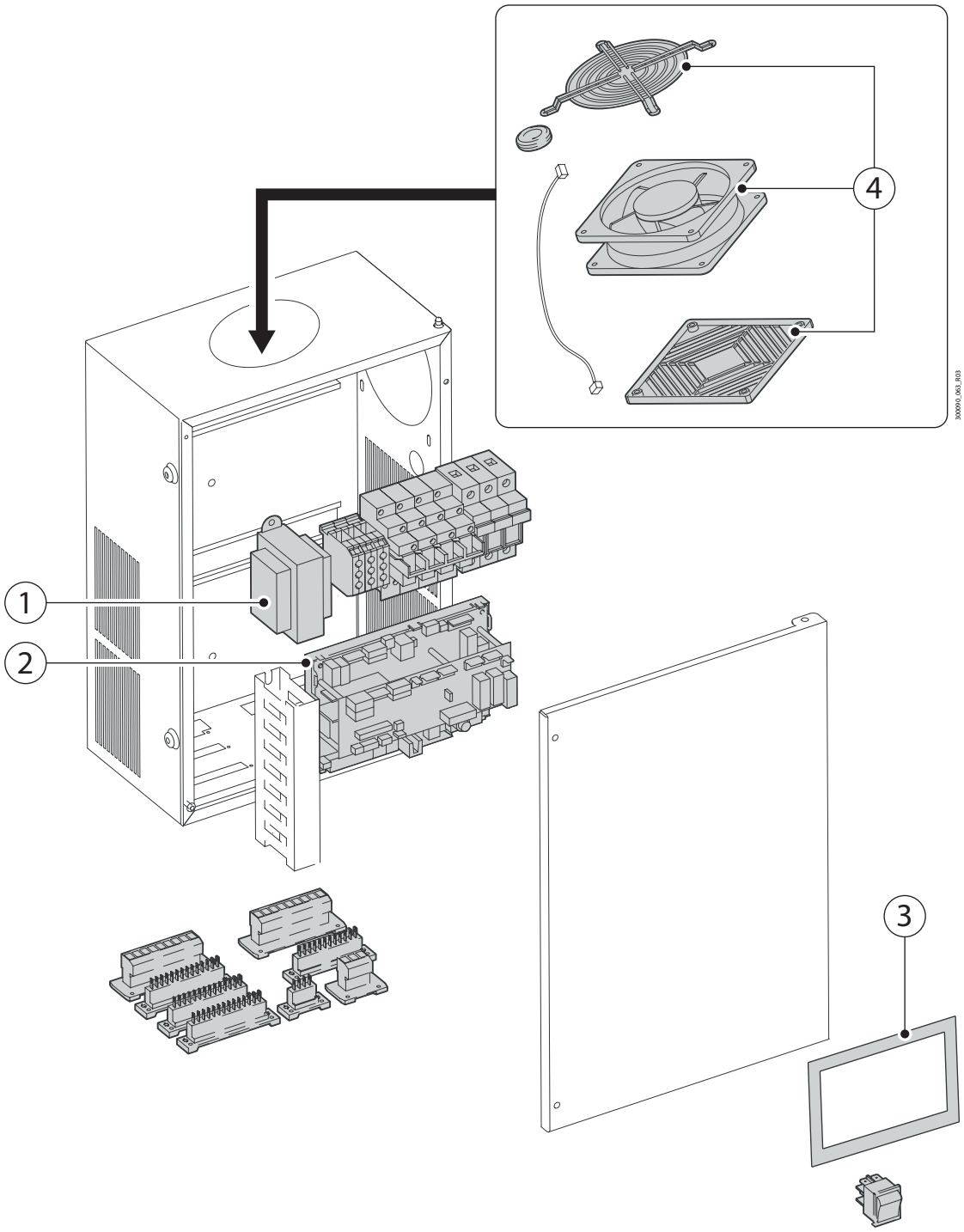

Fig. 19.i

Part number	Description	Ref. figure	Quantity per humidifier
MCKTR00000SP	panel transformer	1	
UGKAD00040SP	unit main control board	2	
HCTXGCR000SP	pGDX graphic touch display	3	
UGKVENT001SP	cooling fan kit	4	

20. CONFORMITY

CAREL INDUSTRIES S.p.A.
via dell'Industria, 11 - 35020 Brugine - Padova - Italy
Phone (+39) 049 97 16 611 - Fax (+39) 049 97 16 600
carel.com - carel@carel.com

Cap. Soc. € 10.000.000 i.v.
C.C.I.A.A. Padova Reg. Imp n. 04359090281
Part. IVA e Cod. Fisc. 04359090281

N. Reg. Prod. Pile: IT09060P00000903
N. Reg. Prod. AEE: IT16030000009265

EU Declaration of Conformity

CE
0085

This declaration of conformity is issued under the sole responsibility of the manufacturer:

CAREL Industries S.p.A. Via dell'Industria, 11 35020 Brugine (PD) Italy

GaSteam - Gas-fired humidifiers

Code	Description
UGaaabDcd5	GaSteam Evolution - Gas-fired humidifiers
a:	Steam production: **045**= 45 kg/h **090**= 90 kg/h **150**= 150 kg/h **180**= 180 kg/h **300**= 300 kg/h **450**= 450 kg/h
b:	Model: **H**= indoor **Y**= outdoor +1°C to +45°C (-40°C to +45°C when used in conjunction with heater kit Carel UGKH2301KWSP - 230V 1kW)
c:	Supply voltage frequency: **0**= 50Hz
d:	Customization options: **0** = standard version **Letters/numbers** = customization identification

The object of the declaration described above is in conformity with the relevant Union harmonisation legislation:

Regulation **2016/426/EU** (GAR),
Directive **2014/35/EU** (LVD),
Directive **2014/30/EU** (EMCD),

GAR : **EN 15502-1:2012 +A1:2015, EN 15502-2-1:2012 +A1:2016**

EMC: **EN 61000-6-1:2007, EN 61000-6-2:2005 +EC:2005, EN 61000-6-3:2007 + A1:2011, EN 61000-6-4:2007 +A1:2011, EN 61000-3-2:2014, EN 61000-3-3:2013**

LVD: **EN 60335-1:2012, EN 60335-2-102:2016**

The notified body DVGW CERT GmbH (Josef-Wirmer-Straße 1-3 , 53123 Bonn, Germany) performed a procedure for EU type examination of the models listed above, and issued the certificate: CE-0085BM0395 dated 24/02/2021, valid till 01/08/2028, on the basis of results of EU report of examination GB 4 2018 T10, GB 4 2018 B11 and GB 4 2020 B12 issued by TUV Rheinland.

Brugine, 02th February 2022

Signed for and on behalf of:
CAREL INDUSTRIES S.p.A.
Ing. Alberto Bianchi
Group Chief Research & Development Officer

Y759_01_UG_(evolution)_dtd.docx

CAREL INDUSTRIES - Headquarters
Via dell'Industria, 11 - 35020 Brugine - Padova (Italy)
Tel. (+39) 049.9716611 - Fax (+39) 049.9716600
e-mail: carel@carel.com - www.carel.com

gaSteam +0300122EN rel. 1.1 - 01.02.2023