ENG

humiFog
pumping station

USER MANUAL

LEGGI E CONSERVA QUESTE ISTRUZIONI

READ AND SAVE THESE INSTRUCTIONS

NO POWER & SIGNAL CABLES TOGETHER

READ CAREFULLY IN THE TEXT!

humiFog
+0300111EN - ENG
Up to date version available on
www.carel.com

GENERAL WARNINGS

FAILURE TO CAREFULLY HEED THE WARNINGS SHOWN IN THIS MANUAL COULD LEAD TO FIRE OR EXPLOSION AND CONSEQUENT DAMAGE TO PROPERTY, INJURY OR DEATH.

CAREL Industries humidifiers are advanced products, whose operation is specified in the technical documentation supplied with the product or can be downloaded, even prior to purchase, from the website www.carel.com. Each CAREL product, in relation to its advanced level of technology, requires setup/configuration/programming to be able to operate in the best possible way for the specific application. Failure to complete such operations, which are required/indicated in the user manual, may cause the final product to malfunction; CAREL accepts no liability in such cases. The customer (manufacturer, developer or installer of the final equipment) accepts all liability and risk relating to the configuration of the product in order to reach the expected results in relation to the specific final installation and/or equipment. CAREL may, based on prior agreements, act as a consultant for the installation/commissioning/use of the unit, however in no case does it accept liability for the correct operation of the humidifier and the final installation if the warnings or suggestions provided in this manual or in other product technical documents are not heeded. In particular, as well as observing the above warnings and suggestions, the following warnings must be observed for correct use of the product:

ELECTRIC SHOCK HAZARD: the humidifier contains live electrical components. Disconnect the mains power supply before accessing inside parts or during maintenance and installation.
WATER LEAK HAZARD: the humidifier automatically and constantly fills/drains certain quantities of water. Malfunctions in the connections or in the humidifier may cause leaks.

CAUTION

The installation of the product must include an earth connection, using the special yellow-green terminal available in the humidifier.

Caution:
- Disconnect the appliance from the mains power supply before accessing any internal parts.
- Environmental and power supply conditions must conform to the values specified on the product rating labels.
- The product is designed exclusively to humidify rooms either directly or through distribution systems (ducts).
- Only qualified personnel who are aware of the necessary precautions and able to perform the required operations correctly may install, operate or carry out technical service on the product.
- Only water with the characteristics indicated in this manual must be used to produce the spray.
- All operations on the product must be carried out according to the instructions provided in this manual and on the labels applied to the product. Any uses or modifications that are not authorised by the manufacturer are considered improper. CAREL declines all liability for any such unauthorised use.
- Do not attempt to open the appliance in any way other than described in the manual.
- Observe the standards in force in the place where the humidifier is installed.
- The appliance is not intended for use by persons (including children) with reduced physical, sensory or mental capabilities, or lack of experience and knowledge, unless they have been given supervision or instruction concerning use of the appliance by a person responsible for their safety.
- Do not install and use the product near objects that may be damaged when in contact with water (or condensate). CAREL declines all liability for direct or indirect damage following water leaks from the humidifier.
- Do not use corrosive chemicals, solvents or aggressive detergents to clean the inside and outside parts of the humidifier, unless specifically indicated in the user manual.
- Do not drop, hit or shake the humidifier, as the inside parts and the linings may be irreparably damaged,

CAREL adopts a policy of continual development. Consequently, CAREL reserves the right to make changes and improvements to any product described in this document without prior warning. The technical specifications shown in the manual may be changed without prior warning. The liability of CAREL in relation to its products is specified in the CAREL general contract conditions, published on the website www.carel.com and/or by specific agreements with customers; specifically, to the extent where allowed by applicable legislation, in no case will CAREL, its employees or subsidiaries/affiliates be liable for any lost earnings or sales, losses of data and information, costs of replacement goods or services, damage to things or people, downtime or any direct, indirect, incidental, actual, punitive, exemplary, special or consequential damage of any kind whatsoever, whether contractual, extra-contractual or due to negligence, or any other liabilities deriving from the installation or use of the product, even if CAREL or its subsidiaries/affiliates are warned of the possibility of such damage.

DISPOSAL

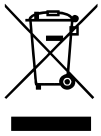
Fig. 1

Fig. 2

PLEASE READ AND KEEP.

WITH REFERENCE TO EUROPEAN UNION DIRECTIVE 2012/19/EU ISSUED ON 4 JULY 2012 AND RELATED NATIONAL LEGISLATION, PLEASE NOTE THAT:
- Waste Electrical and Electronic Equipment (WEEE) cannot be disposed of as municipal waste but must be collected separately so as to allow subsequent recycling, treatment or disposal, as required by law;
- users are required to take Electrical and Electronic Equipment (EEE) at end-of-life, complete with all essential components, to the WEEE collection centres identified by local authorities. The directive also provides for the possibility to return the equipment to the distributor or retailer at end-of-life if purchasing equivalent new equipment, on a one-to-one basis, or one-to-zero for equipment less than 25 cm on their longest side;
- the equipment may contain hazardous substances: the improper use or incorrect disposal of such may have negative effects on human health and on the environment;
- the symbol (crossed-out wheeled bin, see Figure 1), if shown on the product or on the packaging, indicates that the equipment must be disposed of separately at end-of-life;
- if at end-of-life the EEE contains a battery (Figure 2), this must be removed following the instructions provided in the user manual before disposing of the equipment. Used batteries must be taken to appropriate waste collection centres as required by local regulations;
- in the event of illegal disposal of electrical and electronic waste, the penalties are specified by local waste disposal legislation.

Warranty on materials: 2 years (from production date, excluding consumables).

Approval: the quality and safety of CAREL products are guaranteed by the ISO 9001 certified design and production system, as well as the

CE, and WaterMark marks.

Index

1. Purpose of the manual 7

2. How to read the manual 7

3. General safety information and instructions 8
3.1 Intended use 8
3.2 General safety instructions 8
3.3 Personal protective equipment 9

4. introduction 10
4.1 Components 10
4.2 System schematics 10
4.3 Pumping station 14
4.4 Opening the packaging 14
4.5 Positioning 15
4.6 Opening 15
4.7 Identification 15
4.8 Structure 16
4.9 Accessories 16

5. Installation notes 19
5.1 Network connection 19
5.2 Distribution system 20
5.3 Functional diagrams - duct 21
5.4 Functional diagrams - room 21
5.5 Backup and rotation 23

6. Installation 24
6.1 Water connections 24
6.2 Feedwater 25
6.3 Electrical connections 26
6.4 Control connections 27
6.5 Solenoid valve connections 31
6.6 Inputs and outputs 33

7. Maintenance 35
7.1 Hygienic aspects 35
7.2 Routine maintenance 36
7.3 One-off service and repairs 37
7.4 Pump maintenance 37

8. Technical data 39
8.1 Technical specifications 39
8.2 Terminal tightening torque 39
8.3 Fuse chart 39

9. Check list 40

10. Annexes 41
Annex A: Wiring diagrams 41
Annex B: Accessories and spare parts kits 43

1. PURPOSE OF THE MANUAL

This manual contains instructions for the installation, use and maintenance of the models of chillBooster unit referred to in paragraph 4.4. The manufacturer of the unit is:

CAREL INDUSTRIES
Via dell'Industria, 11, 35020
Brugine - Padova (Italy)
Tel. (+39) 049.9716611 - Fax (+39) 049.9716600
e-mail: carel@carel.com - www.carel.com

2. HOW TO READ THE MANUAL

The manual is divided into chapters and paragraphs. Each paragraph is a sub-level of the corresponding chapter. References to headings or paragraphs are indicated by the abbreviation "Chap." or "Par." followed by the number.
Example: "Chap. 2" or "Par. 2.1".
The figures in this manual are numbered consecutively according to the corresponding chapter, for example Figure 1.c is the third figure in chapter one. References to the figures are indicated by the abbreviation "fig." followed by the number. Example: "Fig. 1.c".
The components shown in the figures are marked with numbers. A reference to component 1 in figure 2, chapter 3 will be indicated as follows: "See 1 - Fig. 3.b" or simply "(1 - Fig. 3.b)".

IMPORTANT
The figures shown in this manual are purely indicative. The actual components may vary from those illustrated. If in doubt, contact an authorised service centre.

In addition to the instructions for installation, use and maintenance, this manual contains safety information that requires special attention. This information is denoted by the symbols described below:

DANGER
Failure to comply with this warning will lead to an imminently hazardous situation which, if not avoided, will result in death or serious injury.

WARNING
Failure to comply with this warning will lead to potentially hazardous situation which, if not avoided, could result in death or serious injury.

CAUTION
Failure to comply with this warning will lead to a potentially hazardous situation which, if not avoided, may result in minor or moderate injury.

IMPORTANT
Failure to comply with this warning will lead to a potentially hazardous situation which, if not avoided, could cause minor damage to the unit.

Notice: provides supplementary information to the above safety instructions.

3. GENERAL SAFETY INFORMATION AND INSTRUCTIONS

3.1 Intended use

humiFog is a high pressure adiabatic humification system for humidity control and evaporative cooling. It can be used both to condition the air in an AHU (air handling unit), and for direct humidification or cooling in rooms.

IMPORTANT: the product must only be used for its intended purpose, as envisaged by CAREL. CAREL declines all liability, both contractual and extra-contractual, for any damage to people, animals or things due to installation, control or maintenance errors or improper use.

3.2 General safety instructions

When using products that require electricity and a source of high-pressure water, a number of fundamental safety rules need to be observed, including:

- The appliance must not be used by children or people with reduced physical, sensory or mental capabilities, or people lacking the necessary experience or knowledge or who are not familiar with the operating instructions.
- People without specific qualifications and skills must not use the pumping station.
- People must not come into contact with the appliance if barefoot or any of the parts of their body are wet.
- No technical or cleaning operations are allowed until the appliance has been isolated from the power supply by moving the main system switch to "off" and the main switch on the appliance to "OFF".
- The safety and control devices must never be adjusted without the manufacturer's authorisation.
- The pictograms and labels affixed to the pumping station must not be removed. These must remain legible and the corresponding instructions must be observed at all times. If they are no longer legible, they must be replaced with equivalent pictograms or safety labels.
- The water connections must never be loosened during operation. Improperly secured pipes or hoses may detach without warning, resulting in injury.
- Do not block or obstruct the water drain.
- Do not pull, disconnect or twist the electrical cables coming out of the appliance, even when this is disconnected from the mains power supply.
- Never expose the appliance to the elements. It is designed for indoor use only.
- Do not dispose of the packaging material in the environment and keep it out of the reach of children, as it is a potential hazard. It must be disposed of in accordance with current legislation.
- Do not activate the pumping station without it being adequately supplied with water.
- The customer is responsible for ensuring that the humidification system complies with local guidelines on occupational health and safety and prevention of bacterial proliferation.
- In the event of water leaks, disconnect the pumping station from the power supply, shut off the water supply and promptly notify CAREL's Technical Service or other professionally qualified personnel.
- Periodically check that the water circuit operating pressure is above 1 bar and below than the maximum limit specified for the appliance. Otherwise, contact CAREL's Technical Service or other professionally qualified personnel.
- If the pumping station is not used for an extended period, the following operations need to be carried out:
  - Turn the main switch on the appliance to "OFF"
  - Turn the main system switch to "off"
  - Close the system water taps
  - Empty the system if there is the risk of freezing.
- This instruction manual is an integral part of the appliance and consequently must be kept with care and must ALWAYS accompany the pumping station even if it is transferred to another owner or installed in another system. If damaged or loss, another copy can be ordered from CAREL's local Technical Service.
- Read this instruction manual read carefully to ensure proper and safe installation, operation and maintenance of the appliance. The owner must be adequately informed and trained on how to use the appliance. Users must be familiar with all the information needed for safe operation of the system.
- Before connecting the pumping station to the water and power supply, it can be exposed to temperatures between -10°C and 40°C. Once commissioned, it can be exposed to temperatures between 5°C and 40°C.
- Periodically check that the water drains are not blocked.
- The person in charge of operating the plant must draw up a risk assessment document.
- For operation and maintenance of the humidification system, the requirements of the current VDI 6022 guideline must be observed.

3.3 Personal protective equipment

DANGER: strictly follow the instructions provided in the manual.

Personal protective equipment (PPE) means any equipment intended to be worn and kept by workers in order to protect themselves against one or more risks likely to threaten their health or safety during work, as well as any device or accessory intended for this purpose.
All PPE described in this manual are intended to protect personnel from health and safety risks.

Below is a list of personal protective equipment to be used and the procedures to be adopted to protect workers from the residual risks that exist during the various phases of the humidifier's life cycle.

GLOVES TO PROTECT AGAINST PHYSICAL ELEMENTS:
these must protect the person's hands against cuts, abrasion and heat.

NON-SLIP SAFETY FOOTWEAR: these must prevent falls on slippery surfaces and protect the person's feet from impact, crushing and puncture wounds.

SAFETY HARD HAT: this must protect the person's head against bumps or material accidentally falling from above.

SAFETY GLASSES: these must protect the person's eyes from all risks due to contact with hazardous substances or materials.

PROTECTIVE MASK: this protects the wearer's respiratory tract against all risks associated with the inhalation of dangerous substances.

PROTECTIVE CLOTHING: this guarantees the body adequate protection against thermal and chemical agents.

EARMUFFS: these must attenuate noises that would otherwise be harmful to the person's hearing.

INSTRUCTION MANUAL: this must be referred to whenever necessary, in order to avoid adopting unsafe procedures.

4. INTRODUCTION

4.1 Components

- Pumping station, comprising the system pump and the electrical panel;
- zone electrical panel;
- distribution system and droplet separator for humidification in air handling units;
- blower unit for in-room humidification.

The range includes the pumping station in the humiFog multizone and humiFog multizone Touch versions, which differ in terms of the components supplied, the accessories available and the different system configuration modes.

The system can comprise:
- single zone: 1 pumping station with 1 atomisation system;
- multizone: 1 pumping station that supplies up to 12 independent atomisation systems.

Notice:
- to connect the pumping station to the blowers, use the water circuit assemblies and electrical panels supplied separately by Carel (see the list of accessories);
- to facilitate commissioning, plates already equipped with electrical connectors are available for simply and quickly connecting the electrical panels to the solenoid valves on the distribution manifolds.

The following diagrams provide an overview of the systems that can be implemented.

4.2 System schematics

4.2.1 Air handling unit (AHU)

Notice:
The proper design and construction of the humidification chamber in the air duct / AHU is essential to ensure hygiene during the operation. The following aspects are of utmost importance:
- the inner surfaces shall be made of stainless steel or any other material not promoting microbial growth and permanently resistant to corrosion;
- there must be a drain between the distribution manifolds and the droplet separator and after the droplet separator;
- the dimensions indicated at the chapter "Check list" related to the installation of the droplet separator with respect to the drain pan have to be met;
- the drain pan shall be sloped to the drain on all sides and shall have a drain trap preventing air-side leaks;
- drainage systems shall not be connected directly to the sewage system;
- the access to the distribution manifolds and to the drop separator in the humidification chamber has to be ensured;
- there must be an inspection opening (minimum diametre 150 mm) equipped with a darkening system;
- there must be an interior lighting operable from outside, with clear recognizable operating state from outside;
- the free distance between the nozzles and the droplet separator shall meet the humidification system design data;
- 90% rH downstream of the humidification chamber shall not be exceeded, hence the installation of a limit humidity probe directly connected to the humidifier is highly recommended;
- in the event of a shutdown or failure of the AHU fan, the humidifier shall be switched off automatically via interlock;
- provide for a stepwise shutdown of the AHU to ensure that the humidifier chamber is blown dry prior to intended shutdowns;
- any residual water adhering through surface tension shall be dried off completely by dry-blowing the system;
- the electrical cables wired to the solenoid valves of distribution manifolds shall follow the shortest path and must not lay on the floor so as to avoid any water stagnation.

Single zone

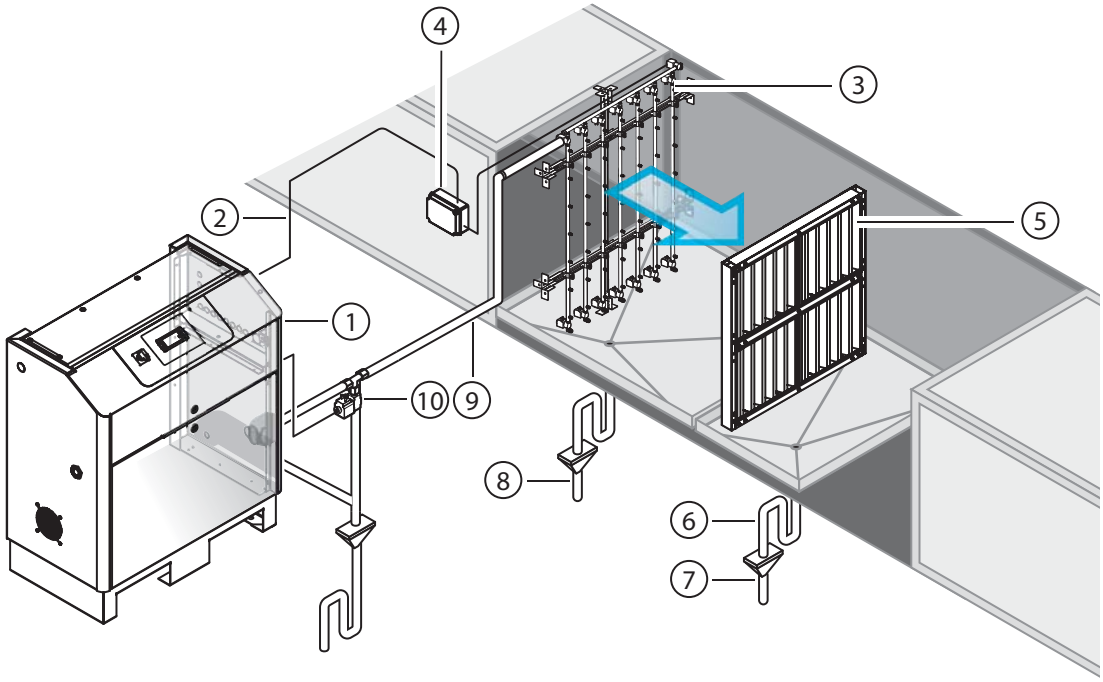

Fig. 4.a

Ref.	Description
1	Pumping station
2	Electrical cables
3	Distribution manifolds
4	Junction box for solenoid valves
5	Droplet separator
6	Drain trap
7	Open funnel drain (after droplet separator)
8	Open funnel drain (before droplet separator)
9	High pressure water line
10	Line drain valve

Tab. 4.a

Multizone

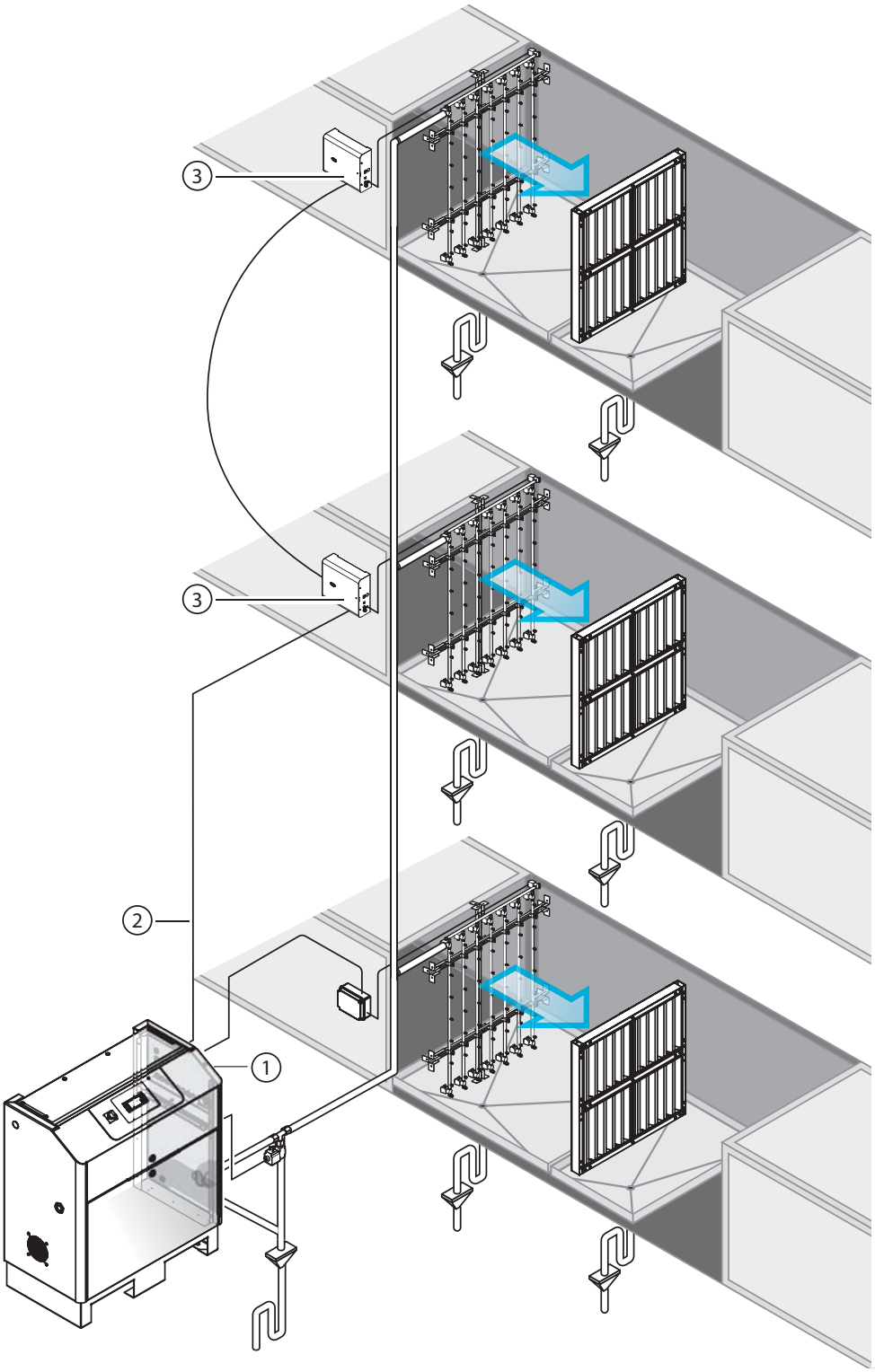

Fig. 4.b

Ref.	Description
1	Pumping station
2	Ethernet cable
3	Zone electrical panel

Tab. 4.b

Notice: for the Ethernet connection from the pumping station to the zone electrical panels, see "Installation notes".

4.2.2 Room

Notice:

- do not install the head units in recesses, closed corridors or behind curtains, as this would hinder the uniform diffusion of humidified air;
- at the fan heads the air is cooler and more humid and the noise emission of nozzles and fans must be taken into consideration. Position the heads so as not to cause discomfort to the occupants of the room;
- do not install in areas where the air is contaminated, particularly by microorganisms or allergens.

Single zone

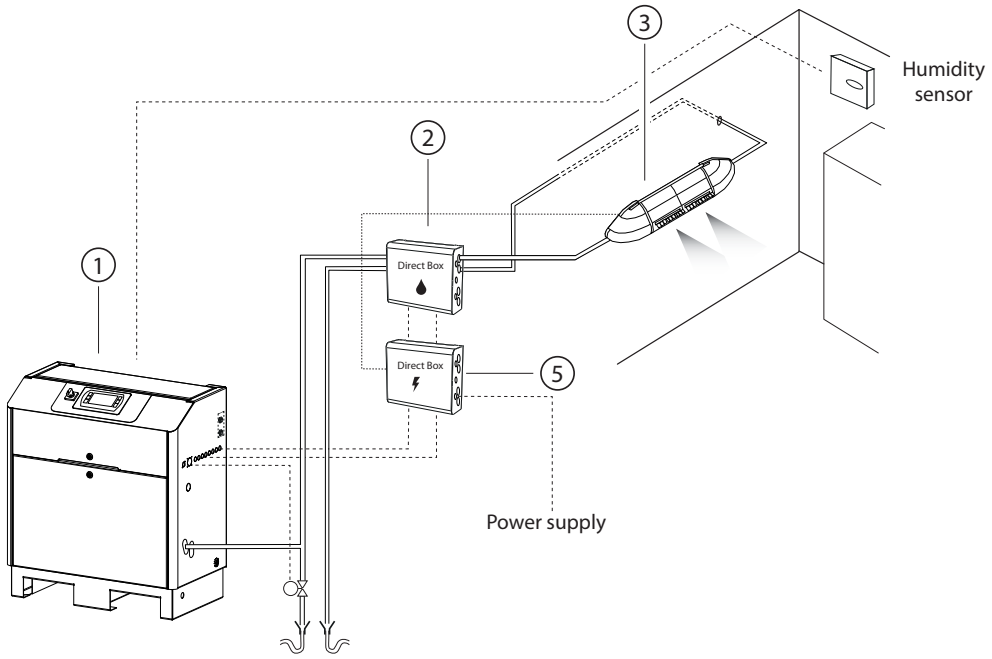

Fig. 4.c

Multizone

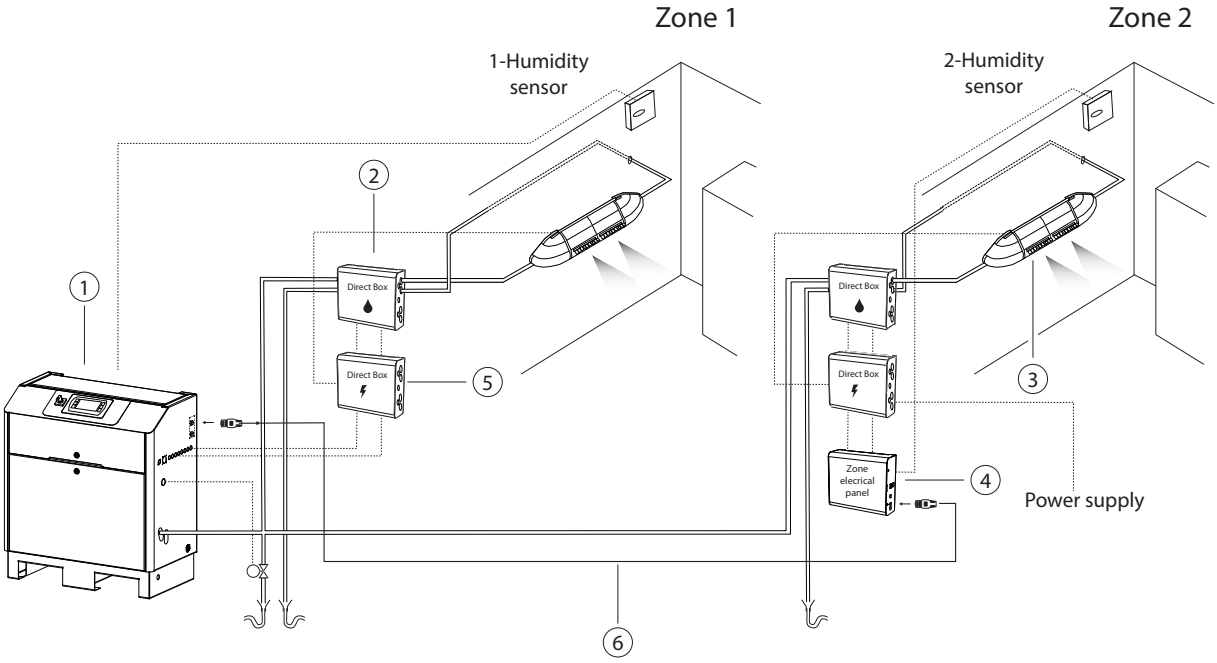

Fig. 4.d

Ref.	Description	Ref.	Description
1	Pumping station	4	Zone electrical panel
2	Directbox hydraulic	5	Directbox electric
3	Blower unit	6	Ethernet cable

Tab. 4.c

4.3 Pumping station

4.3.1 Part numbers

humiFog multizone models

U A	* * *	*	*	5	0	*
Range	**Flow-rate kg/h**	**Model**	**Power supply and approval**	**Revision no.**	**Customisation**	**Pump type**
UA: humiFog	150: 150 kg/h	0: humiFog multizone	D: 230 Vac 50/60 Hz, 1~, CE L: 400 Vac 50/60 Hz, 3~, CE	5: Fifth revision	0: Carel	0: Brass
	300: 300 kg/h					1: Stainless steel
	500: 500 kg/h					2: Silicone-free stainless steel
	800: 800 kg/h					
	1K2: 1200 kg/h					

Tab. 4.d

Notice: in accordance with the requirements of EN60204-1; EN61000-6-2-; EN61000-6-4 in the most recent editions.

4.3.2 Dimensions - mm

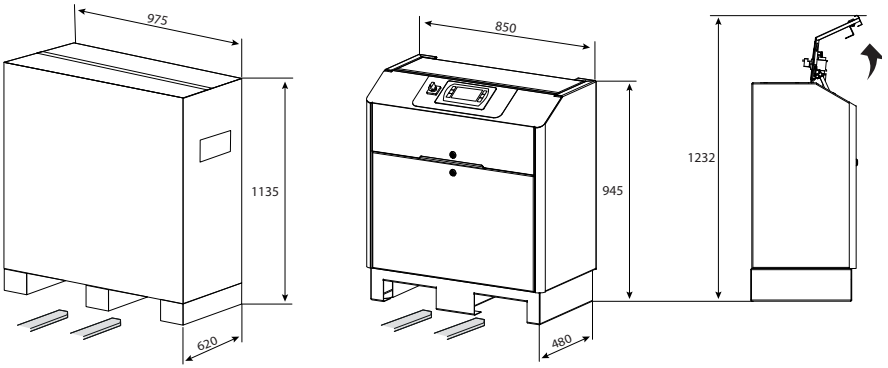

Fig. 4.e

4.3.3 Weight - kg

humiFog multizone models	Weight with/without packaging [kg]
UA150**500/UA150**501/UA150**502	104/ 94
UA300**500/UA300**501/UA300**502	105/ 95
UA500**500/UA500**501/UA500**502	115/ 105
UA800**500/UA800**501/UA800**502	127/ 117
UA1K2**500/UA1K2**501/UA1K2**502	126/ 116

Tab. 4.e

4.4 Opening the packaging

- check that the packaging is intact upon delivery and notify the carrier immediately, in writing, of any damage that may be due to improper or negligent transport;
- move the pallet with the pumping station to the installation site before removing it from the packaging, lifting the box using suitable lifting/handling equipment;
- place it near the position where it will be installed;
- remove the packaging.

IMPORTANT: make sure the load does not swing when lifting it.

4.4.1 Material supplied

After opening the packaging and removing the front panel, check that the following are present:

- 1 cable gland (A) for the power supply cable;
- 6 cable glands (B) for the electrical cables coming out of the pumping station;
- 1 key (C) for opening the panels,
- installation manual

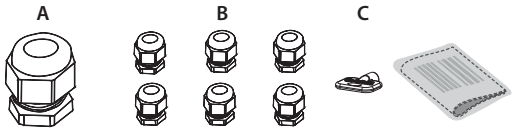

Fig. 4.f

4.5 Positioning

Install the pumping station on the floor, indoors, so as to ensure:

- accessibility of the display and that this can be clearly read;
- opening of the front panel;
- easy access to the internal parts for maintenance purposes;
- connection of the water supply and drain lines;
- power and control electrical connections;
- protection from rain, splashing, direct sunlight and any other heat source.

The temperature/humidity sensors required to control the humidifier must not be affected by misting and they must be placed away from direct sunlight and any heat source.

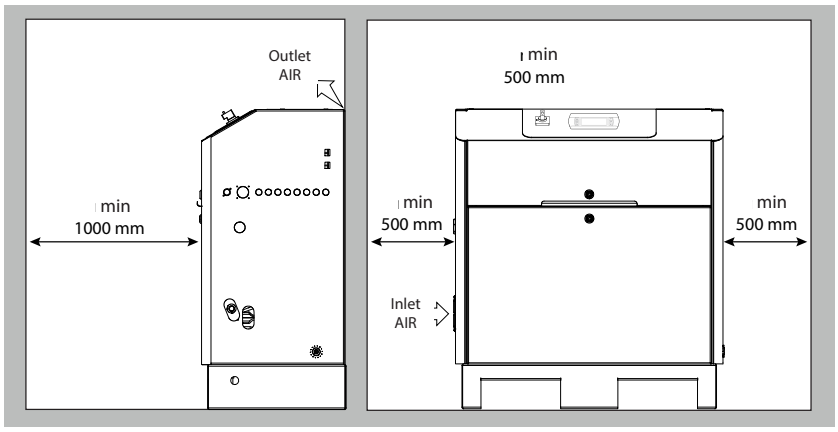

Fig. 4.g

Notice:

- check with a spirit level that the unit is placed on a horizontal surface;
- if the unit is positioned up against a wall, do not place any objects on it that block the cooling air.

4.6 Opening

Open the panels using the key supplied (figure) to access the electrical panel (A) and the water circuit section (B).

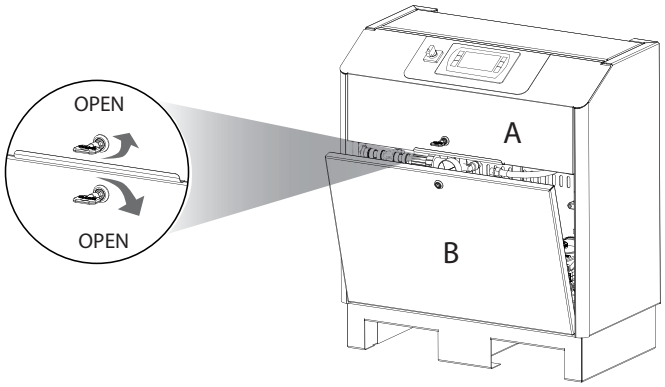

Fig. 4.h

4.7 Identification

The pumping station can be identified by the rating plate located inside the electrical panel.

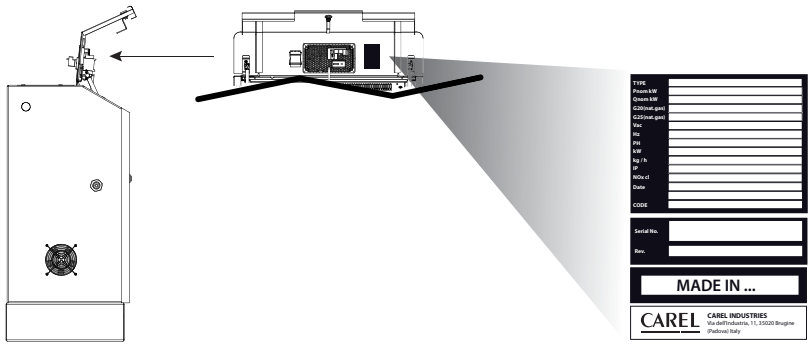

Fig. 4.i

IMPORTANT: tampering, removal or absence of the rating plate or anything else that does not allow certain identification of the product will make any installation or maintenance operations difficult and will void the manufacturer's warranty.

4.8 Structure

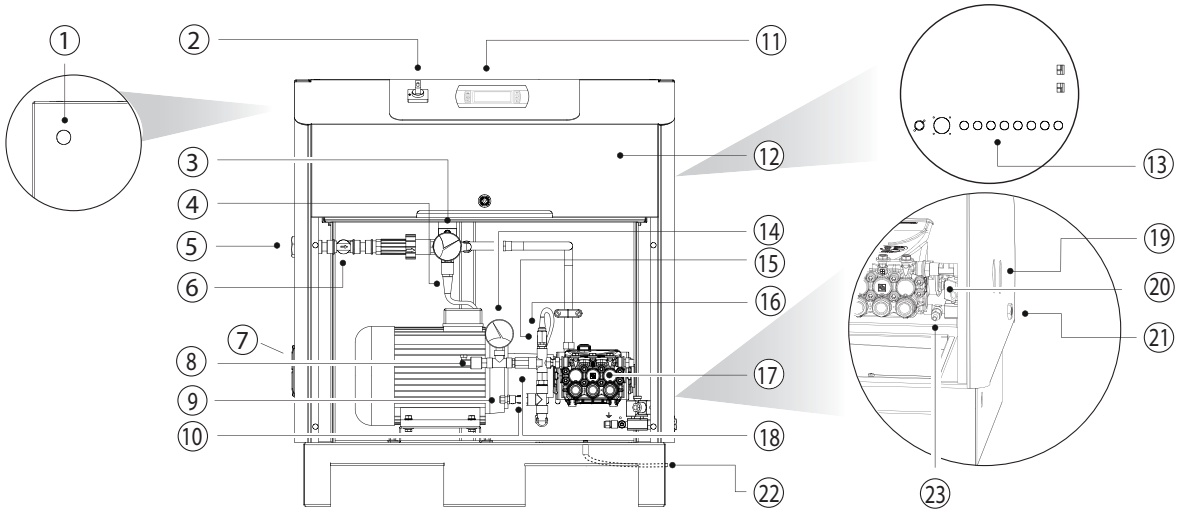

Fig. 4.j

Ref.	Description
1	Opening for the power cable
2	On/Off switch
3	Inlet pressure gauge
4	Low pressure probe
5	Water inlet
6	Supply solenoid valve
7	Cooling fan
8	High pressure switch
9	Temperature probe
10	Thermostat
11	User terminal
12	Electrical panel
13	Openings for cable glands
14	High pressure outlet pressure gauge
15	High pressure control valve
16	High pressure probe
17	Piston pump
18	Elastic joint (internal)
19	Water outlet
20	Cabinet drain solenoid valve
21	Cabinet drain
22	Oil collection tank drain
23	Pressure relief valve

Tab. 4.f

4.9 Accessories

Zone electrical panel

Electrical panel to be connected to the pumping station for managing multizone in-room or duct systems.

Fig. 4.k

Ref.	Description
UA000SD500	230 V electrical panel

Tab. 4.g

4.9.1 In-room humidification

directBOX hydraulic

Water circuit assembly for interfacing the pumping station with the blowers for in-room humidification. It contains the solenoid valves for pressurising 1/2 water lines (zone/step). See technical leaflet +050001828.

Fig. 4.l

Ref.	Description
UAKDLASV10	directBOX hydraulic for managing 1 zone/step
UAKDLASV20	directBOX hydraulic for managing 2 zones/steps

Tab. 4.h

directBOX electric

Electrical panel for interfacing the pumping station with the blowers for in-room humidification. It receives the control signal for the fill and drain valve (1 or 2 zones/steps) and relays this to the directBOX hydraulic to actuate the valves. At the same time it controls the blower fans, which are only activated when there is a humidification request. See technical leaflet +050001828.

Fig. 4.m

Ref.	Description
UAKDLAEL10	directBOX electric for managing 1 zone/step
UAKDLAEL20	directBOX electric for managing 2 zones/steps

Tab. 4.i

Blower unit

The blowers are positioned directly in the room to be humidified and cooled. They differ in terms of flow rate and direction of spray. They are connected to the pumping station via the directBOX hydraulic and directBOX electric accessories. See technical leaflet +050001852.

Fig. 4.n

D	L	A	0	*	*	*	*	0	0
range				Nozzle quantity	Feed	Distribution	Nozzle size (l/h)	--	--
				2	**D**: 230 Vac 50 Hz, 1~, **U**: 115 Vac 60 Hz, 1~	**F**: frontal supply **B**: front and rear	**0**: 1.45		
				4			**1**: 2.80		
				8			**2**: 4.00		

Tab. 4.j

Manifolds with nozzles

The distribution system is designed according to the specific application and comprising manifolds, solenoid valves, nozzles, pipes and fittings.

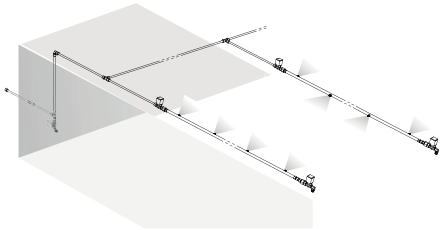

Fig. 4.o

4.9.2 Ducted humidification

Racks

The distribution system is designed according to the specific application and comprising manifolds with nozzles and fixing frame in the duct, available in the fully- or partially-assembled versions.

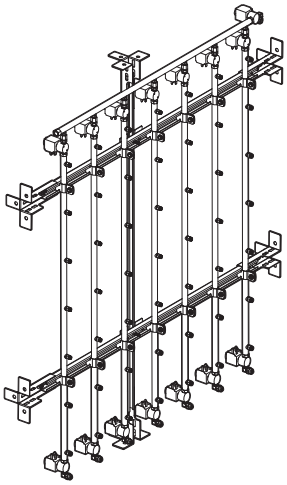

Fig. 4.p

The racks are available with:

- horizontal or vertical collectors;
- solenoid valves fitted on the rack or outside of the air handling unit.

Droplet separator

Frame with stainless steel or fiberglass modules.

Notice: the modules are sized according to the specific application.

Fig. 4.q

5. INSTALLATION NOTES

5.1 Network connection

See the technical data table for the specifications of the connection cables.

5.1.1 Zone panel connection

The connection is made using an Ethernet cable from the pumping station to the zone panels, as shown in the figure.

IMPORTANT: the maximum allowed length of an Ethernet connection between two devices is 100 m (for longer distances, use switch P/N KITSE08000).

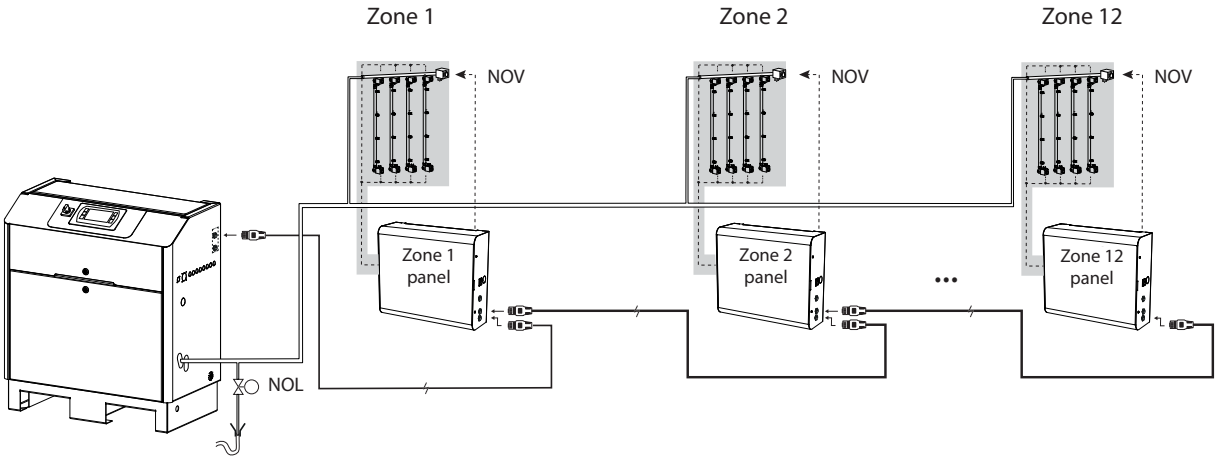

Fig. 5.a

Ref.	Description
NOL	Normally open line drain valve
NOV	Normally open vent valve

Tab. 5.k

5.1.2 Supervisor connection

The connection to the supervisor network can be made in two ways:

- between the Ethernet port on the pumping station and the supervisor network
- via RS485 serial link between the BMS2 port on the pumping station controller and the supervisor network. In the latter case, the communication settings need to be changed when commissioning the system.

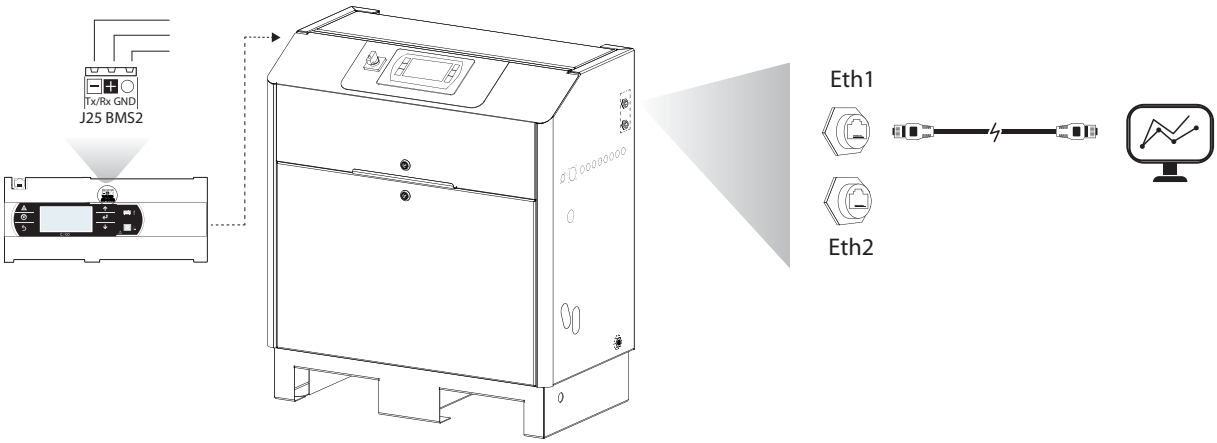

Fig. 5.b

5.2 Distribution system

5.2.1 Atomisation system solenoid valve management

To manage the distribution system, the pumping station controls the following solenoid valves:
- distribution manifold fill/drain (normally closed NC / normally open NO, respectively). See the following diagrams;
- vent, used to facilitate the emptying of the distribution system (NOV, normally open);

Case 1: installation in an AHU (air handling unit)

The water is atomised through a series of distribution manifolds (racks), equipped with nozzles.
One or more manifolds can be grouped together to form a "step". All of the manifolds in the same step are activated simultaneously to start/stop atomisation.
Each rack can be managed by the pumping station or by a zone panel. There are a maximum of 6 steps per rack.
Each step comprises a maximum number of solenoid valves, as shown in the table; however the total number of powered solenoid valves cannot exceed 22 (including the vent and line drain valves).

No. of steps	Maximum no. of solenoid valves
1	5 NC + 5 NO (*)
2	3 NC + 3 NO
3	2 NC + 2 NO
4	4 NC + 4 NO
5	1 NC + 1 NO
6	1 NC + 1 NO

Tab. 5.l

(*) NC1a, NC1b, ..., NC1e +NO1a, NO1b, ..., NO1e

Case 2: installation of the blowers in the room

The water is atomised through the nozzles installed on blowers or on racks in the room. These can be grouped together to form steps, in the same way as for the rack manifolds.

5.2.2 Drain valve management (NOL)

The pumping station manages and controls the line drain valve (NOL, normally open). The zone panel can also manage a connected line drain valve.

Notice: the line drain valve must be fitted at the lowest point in the water circuit and wired to the nearest electrical panel (pumping station or zone panel), so that when opened, the entire system is emptied.

Case 1: Pumping station located below the distribution manifolds

Connect the drain valve near to pumping station that will control its opening.

Case 2: Pumping station located above the distribution manifolds, placed at different heights.

The drain valve must be connected near to the lowest distribution manifold.

Notice: the control signal for the zone 12 drain valve is output J12 NO3 on the zone electrical panel controller. See the corresponding manual.

Case 3: Distribution manifolds located both above and below the pumping station

Connect multiple drain valves at the lowest points in the water circuit.

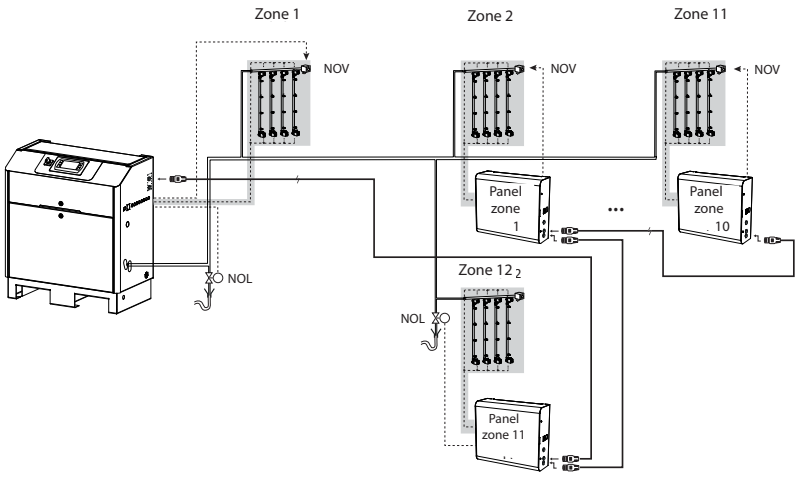

Fig. 5.c

5.3 Functional diagrams - duct

5.3.1 Pumping station

Case 1: zone 1: for pumping station-rack distances of up to 30 m.

The control signal to the zone 1 solenoid valves is sent directly by the pumping station.

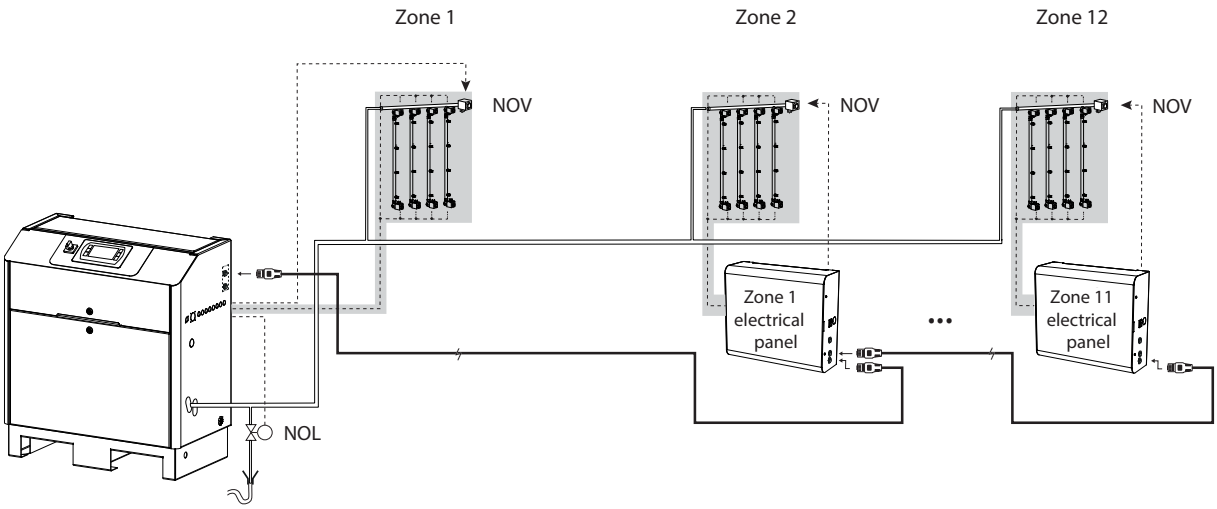

Fig. 5.d

Case 2: zone 1 located between 30 m and 100 m with direct connection.

The control signal to the solenoid valves comes from the zone 1 electrical panel, located near the zone 1 distribution rack.

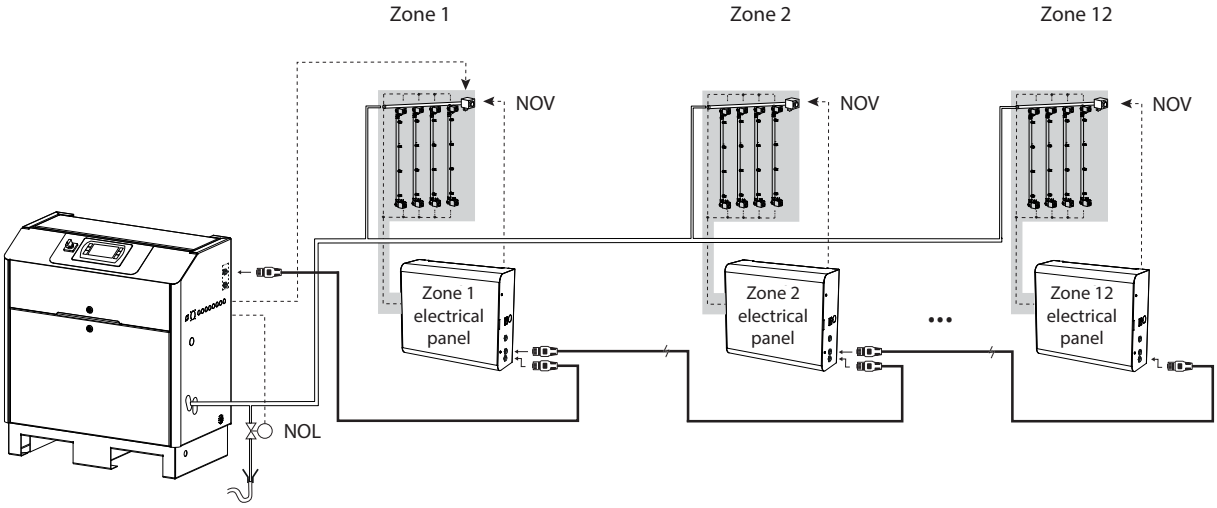

Fig. 5.e

5.4 Functional diagrams - room

IMPORTANT: the blower fill and drain valves are contained in the directbox hydraulic panel. The maximum allowable length for the water line leaving and re-entering the directbox or that, if no directbox is installed, connects the fill valve to the drain valve, is 30 m.

Notice: when making the water connections, always observe the following warnings:

- limit as much as possible the length of the fill/drain line on each distribution circuit;
- ensure a minimum slope of the piping to assist emptying during the drain cycle.

Case 1: 1 zone with 1 step

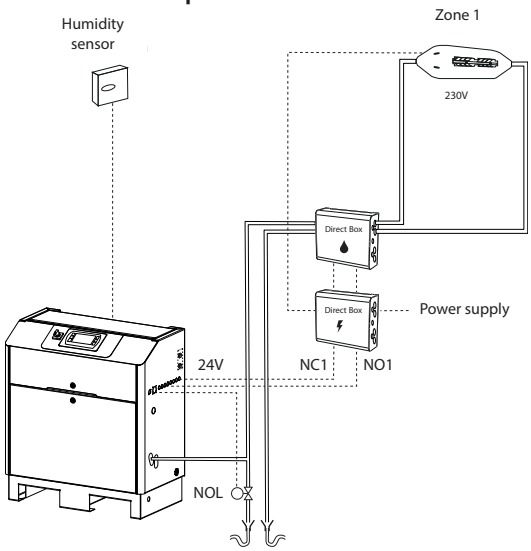

Fig. 5.f

Case 2: 1 zone with 2 steps

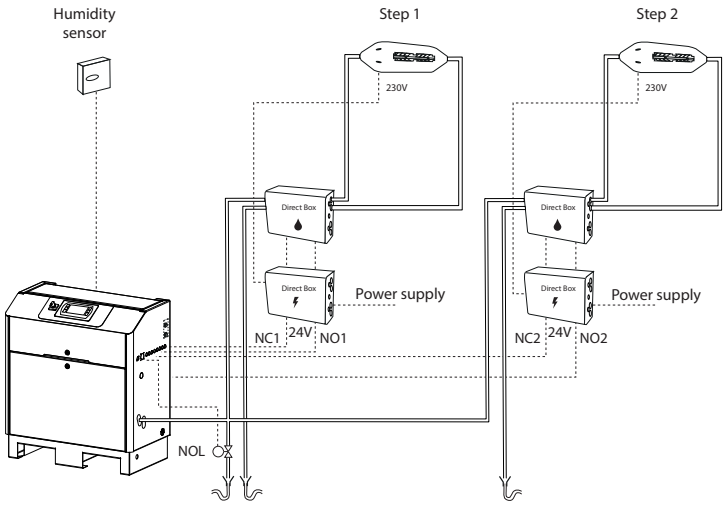

Fig. 5.g

Case 3: 2 zones with 1 step

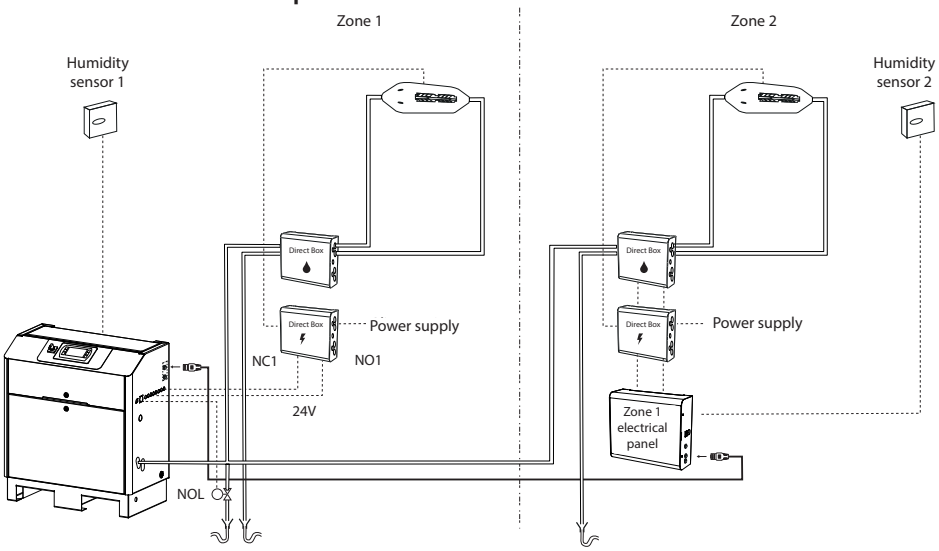

Fig. 5.h

5.5 Backup and rotation

5.5.1 Backup and rotation connection

The backup and rotation system configuration uses two pumping stations, one primary and the other backup, as well as a zone panel for each zone.

1. Connect the primary pumping station to the backup pumping station via an RJ45 Ethernet cable between the Ethernet port on the two units.
2. Connect one of the two pumping stations to the zone electrical panel as described in the paragraph on *Zone panel connections*.
3. Connect the solenoid valves in the zone distribution system to the corresponding zone electrical panel.

When connecting the NOL valves, there are two distinct possibilities:

- connect the two NOL valves in series, each of which to a different pumping station (as per the following diagram) if the lowest point is near the pumping stations or the NOL valve needs to be connected near to the pumping stations,
- connect a single NOL valve to the nearest zone electrical panel if there is no need to install the NOL valve near the pumping stations.

Notice: always install a non-return valve on the outlet line. A non-return valve is required on the outlet line of each individual pumping station, before the two pump water lines join.

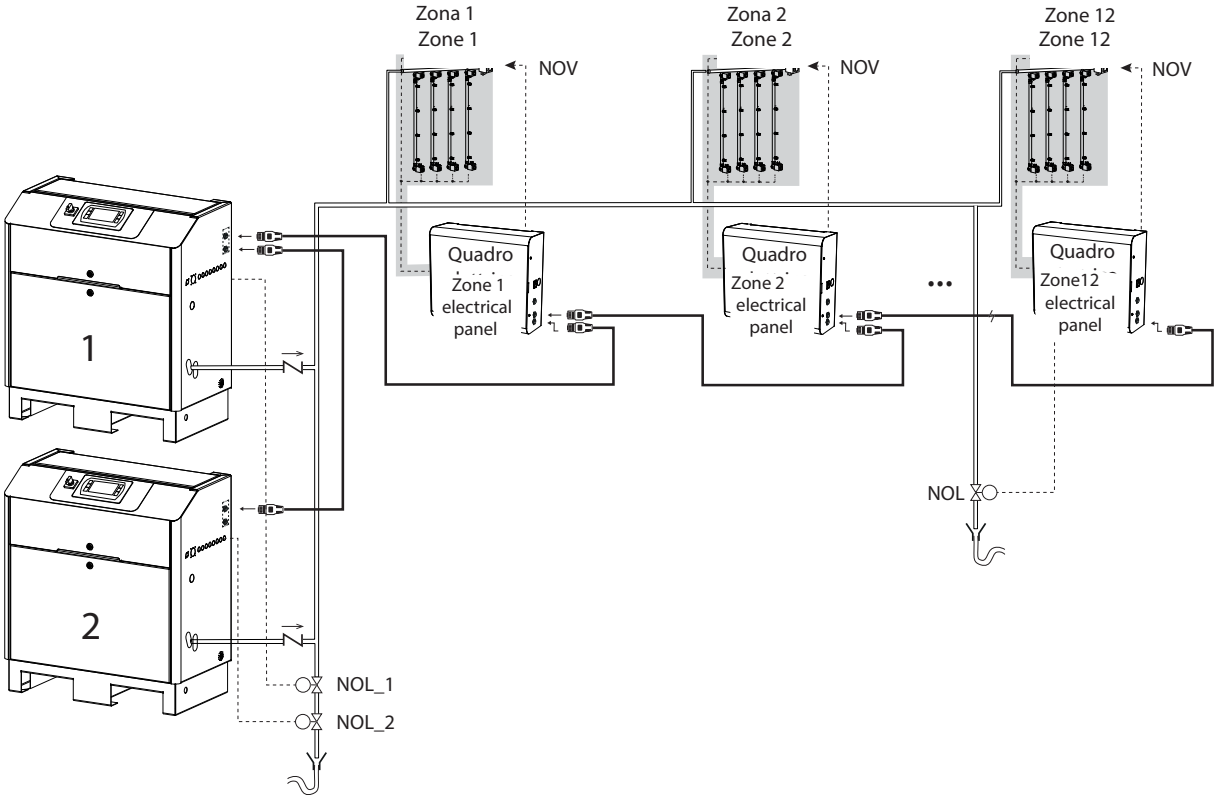

Fig. 5.i

6. INSTALLATION

6.1 Water connections

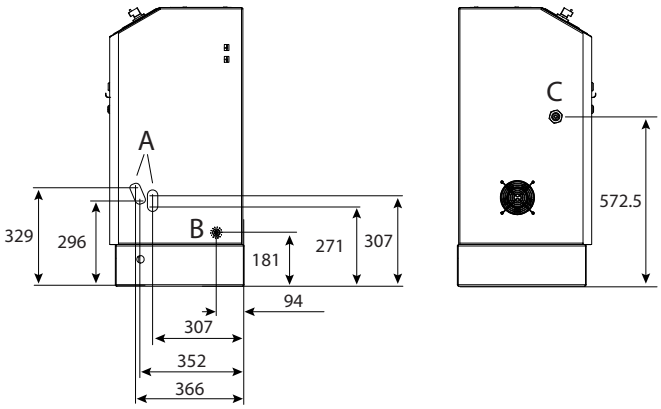

Model	Water inlet (C)	Water outlet (A)	Drain (B)
150	3/4"G - F	M16 x 1.5 - M	1/4"G - F
300	3/4"G - F	M16 x 1.5 - M	1/4"G - F
500	3/4"G - F	M16 x 1.5 - M	1/4"G - F
800	3/4"G - F	M22 x 1.5 - M	1/4"G - F
1200	3/4"G - F	M22 x 1.5 - M	1/4"G - F

Tab. 6.a

Fig. 6.a

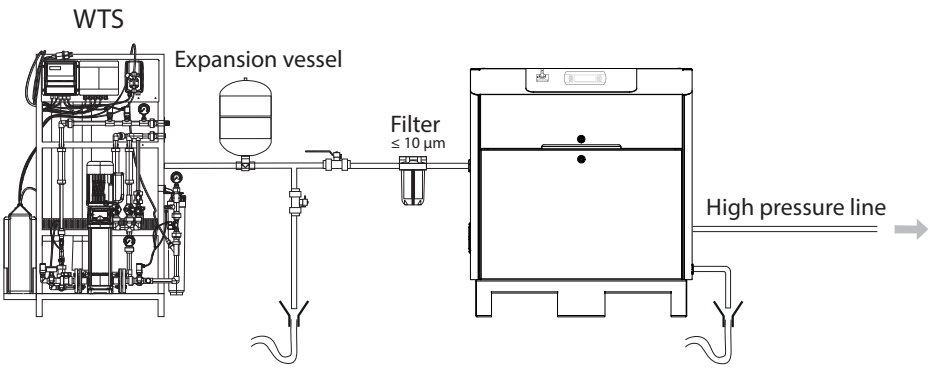

Fig. 6.j

Ref.	Description
WTS	Water Treatment System
Filter	Filter
Expansion vessel	Expansion vessel
High pressure line	High pressure line

Tab. 6.b

1. Install a 10 µm mechanical filter on the feedwater line to trap any solid impurities;
2. Install a shut-off valve upstream of the pumping station to shut off the supply line and carry out maintenance;
3. Install an expansion vessel upstream of the pumping station to dampen the variations in pressure that may occur on the water supply line;
4. Install a manual drain valve to empty the demineralised water line between the WTS and the pumping station in the event of long standstill;
5. Connect the power line to the pumping station;

Notice: the internal diameter of the feedwater pipe must be no less than:

10 mm	UA150-300
15 mm	UA 500-800-1K2

6. Connect the water drain. Use piping suitable for demineralised water. The drain pipe must be below the pumping station drain to ensure the natural downflow of water;
7. Prepare a funnel to interrupt continuity of the drain pipe and a drain trap to prevent odours for returning;

Notice: the funnel and the drain trap must be installed at a height that guarantees the natural downflow of water.

8. Connect the high pressure line to the pumping station.

Piping table for the connection of the pumping station to the distribution system

line flow rate l/h	pipe diameter per line length			
	10 m	25 m	50 m	100 m
up to 300l/h	1/4" (Φ int. 8mm)	1/4" (Φ int. 8mm)	1/4" (Φ int. 8mm)	1/2" (Φ int. 13mm)
from 300 to 450l/h	1/4" (Φ int. 8mm)	1/4" (Φ int. 8mm)	1/2" (Φ int. 13mm)	1/2" (Φ int. 13mm)
from 450 to 600l/h	1/4" (Φ int. 8mm)	1/2" (Φ int. 13mm)	1/2" (Φ int. 13mm)	1/2" (Φ int. 13mm)
over 600l/h	1/2" (Φ int. 13mm)	1/2" (Φ int. 13mm)	1/2" (Φ int. 13mm)	1/2" (Φ int. 13mm)

Notice:
- observe the local regulations for connecting the system to the drinking water supply (see VDI/DVGW 6023, DIN EN 1717 and DIN 1988-100), avoiding any backflow to mains;
- for the Australian market and to comply with Watermark requirements, a watermarked approved dual check valve shall be installed in the supply line to the humidifier when connected to potable water. Should on the other hand the humidifier be fed with treated water from a Carel reverse osmosis system connected to potable water, the dual check valve shall be installed in the supply line to the reverse osmosis system.

6.2 Feedwater

humiFog must only be supplied with demineralised water.
The use of demineralised water guarantees:
- minimum maintenance;
- no clogging of the nozzles;
- no dust (the droplets that evaporate do not release mineral salts into the AHU/room);
- greater hygiene.

The feedwater must be treated so as to ensure the limit values listed in the table. Under normal circumstances, this means that the water must derive from a reverse osmosis system.
Lon exchange softening is not recommended, as it is ineffective in removing salts and as it can cause microbial contamination.

Feedwater specifications	unit of measure	limits	
		min.	max.
Temperature	°C	5	20
(pH) (**)		6.5	8.5
Specific conductivity at 20°C (**) (σR, 20°C) for steel pump	µS/cm	0	50
Specific conductivity at 20°C (**) (σR, 20°C) for brass pump	µS/cm	30	50
Total hardness (**) (TH)	ppm CaCO3	0	25
Temporary hardness	ppm CaCO3	0	15
Total quantity of dissolved solids (cR)	ppm	(*)	(*)
Dry residue at 180°C (R180°C)	ppm	(*)	(*)
Iron + Manganese	ppm Fe+Mn	0	0
Chlorides	ppm Cl	0	10
Silicon dioxide	ppm SiO2	0	1
Residual chlorine	ppm Cl-	0	0
Calcium sulphate	ppm CaSO4	0	5

Tab. 6.c

(1) values dependent on the specific conductivity; in general:
CR ≅ 0.65 * σR, 20°C; R180 ≅ 0,93 * σR, 20°C
(**) most important values to be taken into consideration for each type of installation.

IMPORTANT:
- if the specific conductivity is less than 30 µS/cm, the stainless steel pump is recommended;
- for conductivities higher than 1000 µS/cm, the water must be pre-treated prior to reverse osmosis;
- with regard to microbiological parameters, the water used must be of drinking quality;
- if it is not possible to keep the water temperature below 20°C, appropriate measures must be provided for in the risk assessment document by the person in charge of running the system.

6.3 Electrical connections

Before making the connections, make sure that the unit is disconnected from the power supply: turn the main system switch and pumping station switch to OFF.
Install the cable glands on the left and right side of the electrical panel for the electrical cables to pass through.

6.3.1 Electrical panel

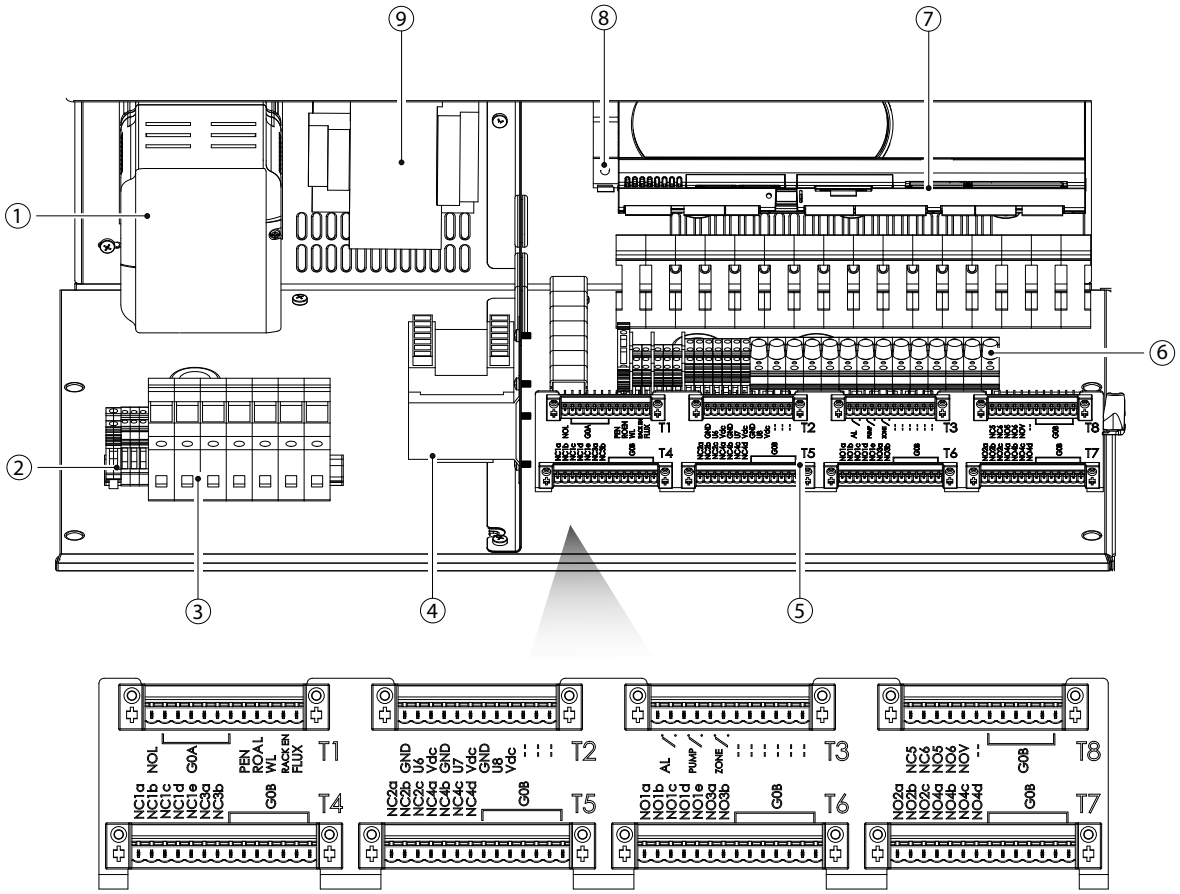

Fig. 6.k

Ref.	Description
1	Inverter
2	Power terminal
3	Fuses F1 to F8 (F8 for three-phase model only)
4	Transformer A (see wiring diagram)
5	Connector T1 to T8
6	Fuse F10 to F23
7	Electronic controller
8	Fuse F9
9	Transformer B (see wiring diagram)

Tab. 6.d

6.3.2 Power supply

Notice: recommended cable size: 2.5 mm² (AWG 13).

Check that the unit's power supply voltage corresponds to the rated data.
The connection must be made in compliance with national and local regulations in force.

IMPORTANT:
- cables must comply with local regulations;
- install a switch upstream of the pumping station to isolate it from the power supply line;
- provide a TT earth system, with earth fault current protection => 30 mA.

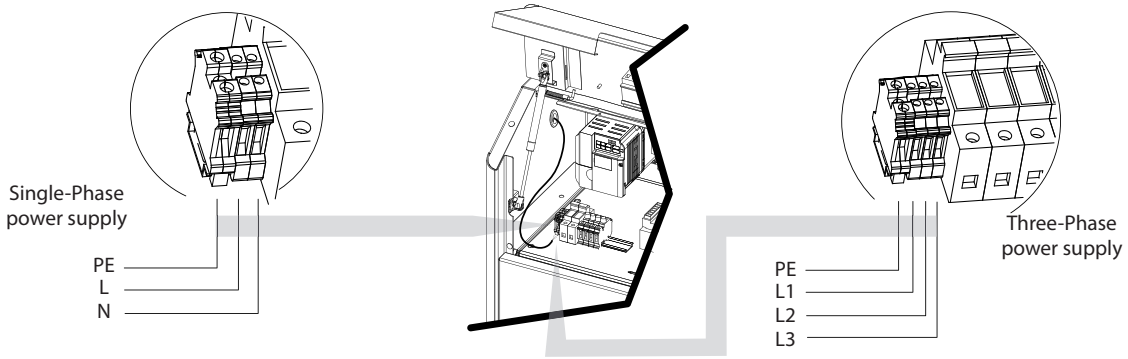

Fig. 6.l

6.4 Control connections

The type of control is selected on the user interface. See the humidification system **commissioning manual**.

Notice: for all control connections:
- recommended cable size: 0.3 - 0.5 mm² (AWG 22/20) up to 30 m
- recommended cable size: 0.8 - 1.3 mm2 (AWG 18/16) > 30 m

6.4.1 Enable pumping station production (PEN): Pump Enable

Notice: the pumping station is supplied with the PEN-G0A contacts jumpered. To enable the pumping station remotely, remove the jumper and connect a voltage-free contact.

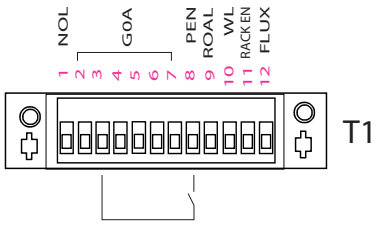

Fig. 6.m

Connector	Terminals
T1	PEN-GOA

Tab. 6.e

6.4.2 Enable zone production (RACKEN): Rack Enable

Notice: the pumping station is supplied with the RACKEN- G0A contacts jumpered. To enable the rack remotely, remove the jumper and connect a voltage-free contact.

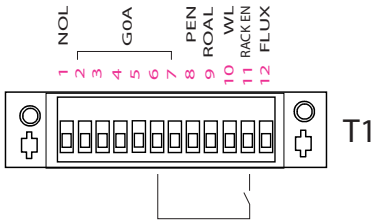

Fig. 6.n

Connector	Terminals
T1	RACKEN - GOA

Tab. 6.f

6.4.3 Enable from air flow switch (FLUX): Air flow switch

Enable from air flow switch input.

Notice: the pumping station is supplied with the FLUX - GND terminals jumpered.

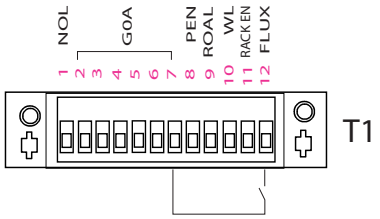

Fig. 6.o

Connector	Terminals	Device
T1	FLUX - GOA	flow switch (contact open/closed = production disabled/enabled)

Tab. 6.g

6.4.4 On/off control signal: example of a humidistat

Notice: contact type: voltage-free.

A) ON/OFF

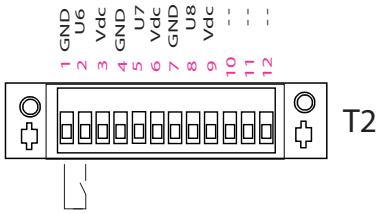

Fig. 6.p

Connector	Terminals
T2	U6 - GND

Tab. 6.h

B) ON / OFF AND HUMIDITY/TEMPERATURE LIMIT PROBE

Inputs allowed for limit probe: 0 to 1 V; 0 to 10 V; 2 to 10 V; 0 to 20 mA; 4 to 20 mA; NTC

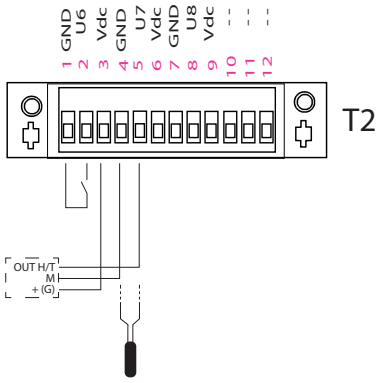

Fig. 6.q

Connector	Terminals	Device
T2	U6 - GND	Humidistat/thermostat
T2	U7 - GND - Vdc	Active humidity/temperature probe
	U7 - GND	NTC probe

Tab. 6.i

6.4.5 Modulating control signal

With a modulating control signal, depending on the type of controller, the following can be connected to the terminals:

- external controller
- external controller and humidity/temperature limit probe
- main humidity/temperature probe
- main humidity/temperature probe and humidity/temperature limit probe
- dual main humidity/temperature probe
- triple main humidity/temperature probe
- * rack temperature limit probe (can be used with some of the previous control configurations)

IMPORTANT: use shielded cables. The cables must not be placed near the power supply cables or contactors, to avoid electromagnetic disturbance.

A) Modulating control with external controller

Possible inputs: 0 to 1 V; 0 to 10 V; 2 to 10 V; 0 to 20 mA; 4 to 20 mA.

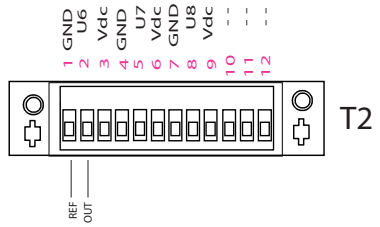

Fig. 6.r

Connector	Terminals	Device
T2	U6 - GND	Signal from external controller

Tab. 6.j

B) Modulating control with external controller and humidity/temperature limit probe

Possible inputs: 0 to 1 V; 0 to 10 V; 2 to 10 V; 0 to 20 mA; 4 to 20 mA; NTC

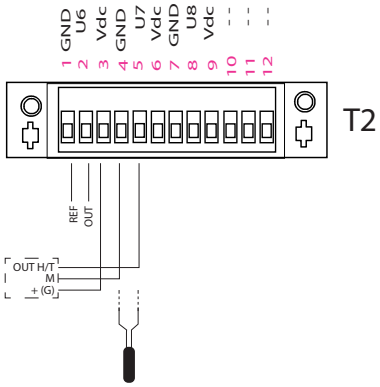

Fig. 6.s

Connector	Terminals	Device
T2	U6 - GND	Signal from external controller
T2	U7 - GND - Vdc	Humidity/temperature limit probe
	U7 - GND	NTC

Tab. 6.k

C) Modulating control with humidity/temperature probe

Possible inputs: 0 to 1 V; 0 to 10 V; 2 to 10 V; 0 to 20 mA; 4 to 20 mA; NTC

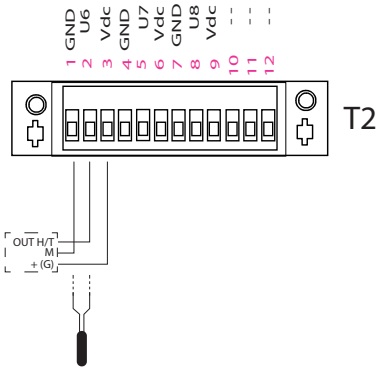

Fig. 6.t

Connector	Terminals	Device
T2	U6 - GND - Vdc	Active humidity/ temperature probe
	U6 - GND	NTC

Tab. 6.l

D) Modulating control with humidity/temperature probe and humidity/temperature limit probe

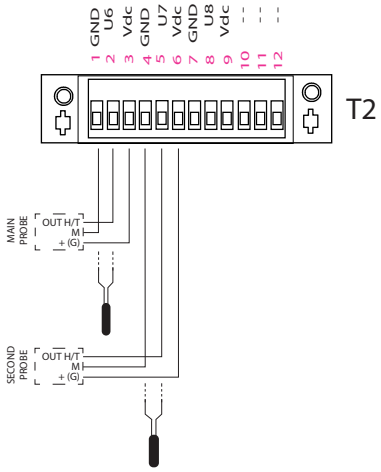

Fig. 6.u

Connector	Terminals	Device
T2	U6 - GND - Vdc	Active humidity/ temperature probe
	U6 - GND	NTC
T2	U7 - GND - Vdc	Humidity/temperature limit probe
	U7 - GND	NTC

Tab. 6.m

E) Modulating control with dual humidity/temperature probe

Possible inputs: 0 to 1 V; 0 to 10 V; 2 to 10 V; 0 to 20 mA; 4 to 20 mA; NTC

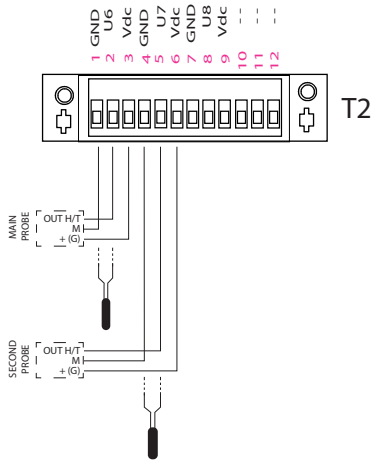

Fig. 6.v

Connector	Terminals	Device
T2	U6 - GND - Vdc	Active humidity/ temperature probe
	U6 - GND	NTC
T2	U7 - GND - Vdc	Active humidity/ temperature probe
	U7 - GND	NTC

Tab. 6.n

F) Modulating control with triple humidity/temperature probe

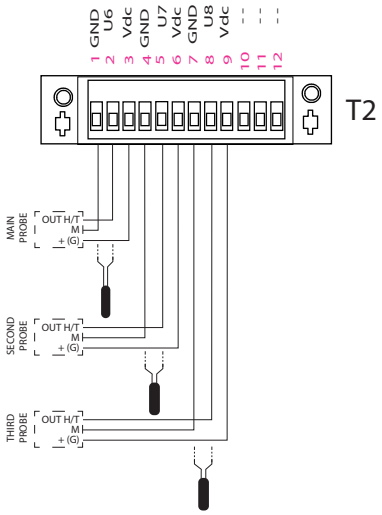

Fig. 6.w

Connector	Terminals	Device
T2	U6 - GND - Vdc	Active humidity/ temperature probe
	U6 - GND	NTC
T2	U7 - GND - Vdc	Active humidity/ temperature probe
	U7 - GND	NTC
T2	U8 - GND - Vdc	Active humidity/ temperature probe
	U8 - GND	NTC

Tab. 6.o

G) Modulating control with rack temperature limit probe

Notice: this control configuration cannot be integrated with:
- modulating control with dual humidity/temperature probe;
- modulating control with triple humidity/temperature probe.

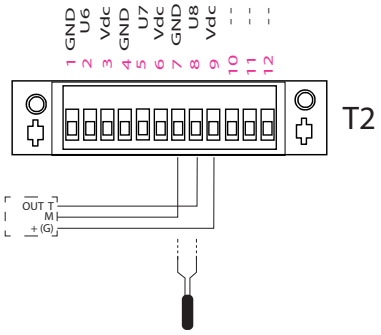

Fig. 6.x

Connector	Terminals	Device
T2	U8 - GND - Vdc	Temperature probe
	U8 - GND	NTC

Tab. 6.p

6.5 Solenoid valve connections

Cable type	Max length
0.8 mm² (AWG 18)	30 m

Tab. 6.q

6.5.1 Solenoid valve connection for atomisation system

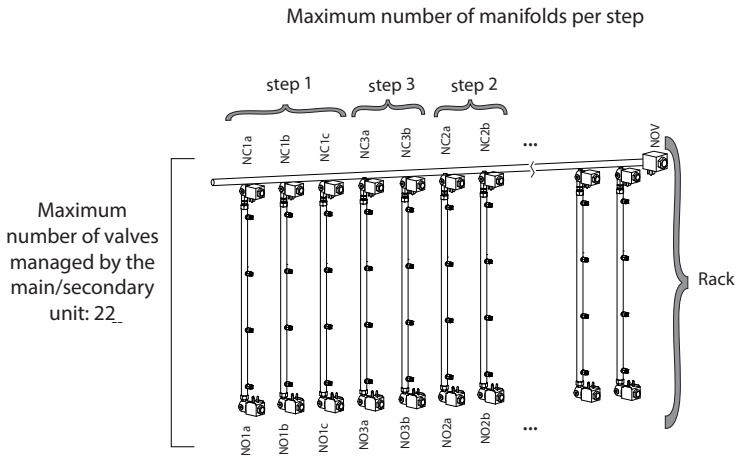

Fig. 6.y

Below is the wiring diagram to the connectors on the electrical panel.

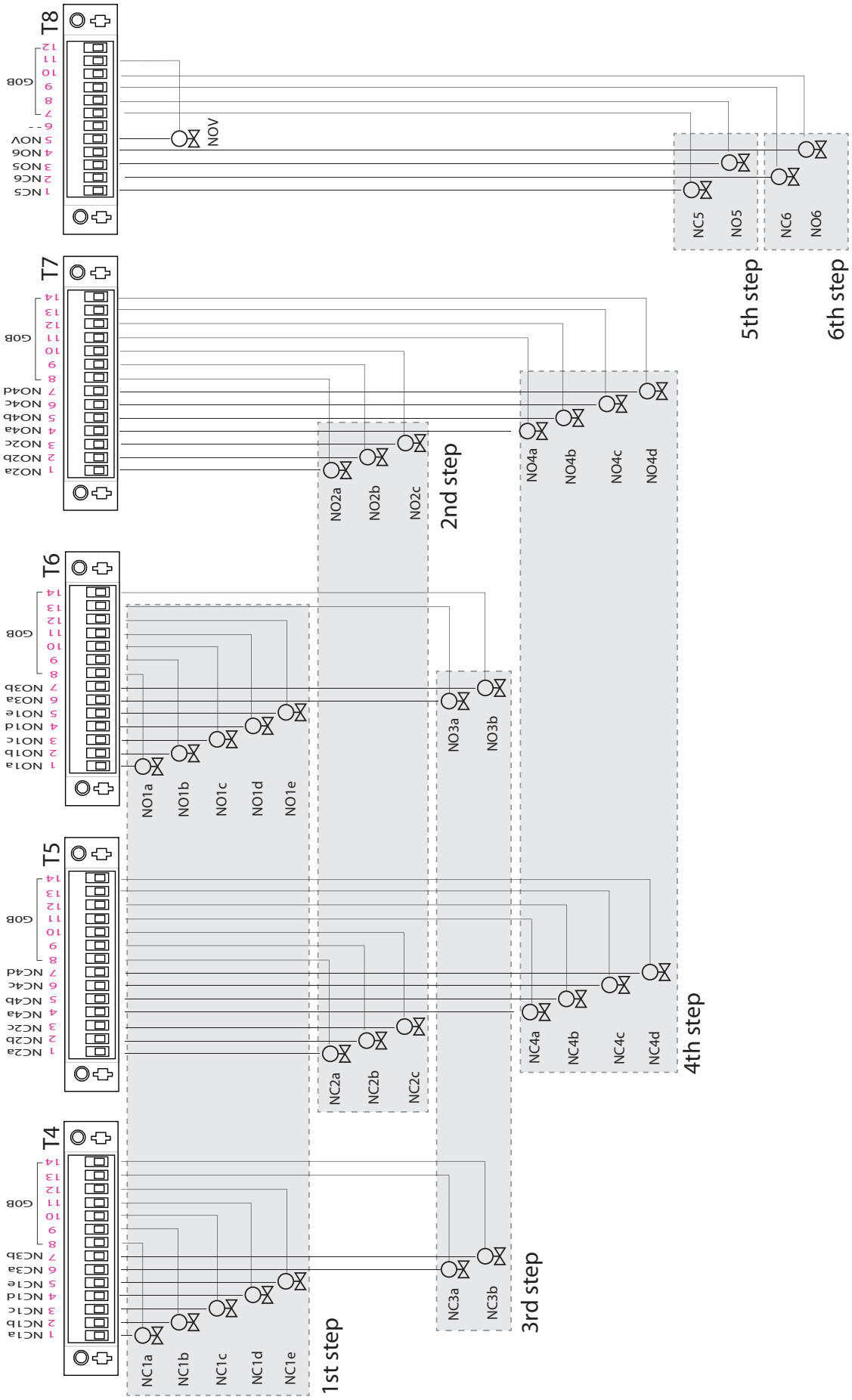

Fig. 6.z

6.5.2 Line drain solenoid valve connection

The line drain valve (NOL) empties the water line that connects the pumping station to the distribution system in each zone.

IMPORTANT: this should be installed near the pumping station and in any case at the lowest point in the system, to facilitate emptying by gravity.

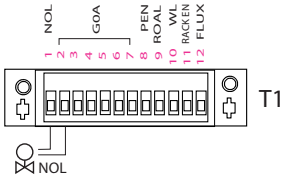

Fig. 6.aa

Connector	Terminals
T1	NOL - GOA

Tab. 6.r

Notice: recommended cable size: for lengths < 30 m: 0.8 mm^2 (AWG 18).

6.6 Inputs and outputs

6.6.1 Water treatment system (WTS) alarm input

Alarm input from the reverse osmosis water treatment system (WTS).

Notice: the pumping station is supplied with the ROAL - GND terminals jumpered.

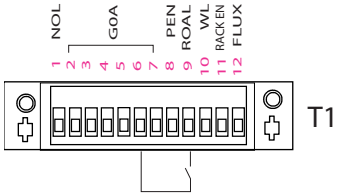

Fig. 6.ab

Connector	Terminals	Device
T1	ROAL - GOA	Alarm signal from water treatment system (contact open/closed = alarm present/absent)

Tab. 6.s

6.6.2 Water leakage alarm input

Water leakage alarm input, detected by the flood sensor.

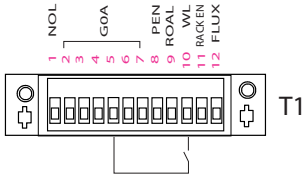

Fig. 6.ac

Connector	Terminals	Device
T1	WL - GOA	Flood sensor (contact open/closed = alarm present/absent)

Tab. 6.t

6.6.3 Alarm output

The alarm output is activated when one or more alarms are detected. The contact/output can be relayed to a supervisory system.

Relay electrical specifications	Power 500 VA; Voltage 250 V; Current 2 A resistive/inductive	
Relay status and operation	Contact open	alarms present
	Contact closed	no alarms present

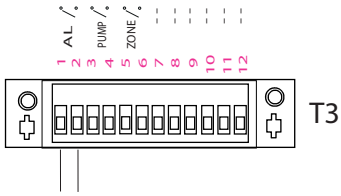

Fig. 6.ad

Connector	Terminals
T3	AL

Tab. 6.u

6.6.4 Pump status output

Programmable digital output for the following functions:

- pump status (default)
- unit working life
- maintenance warning
- no water alarm
- low inlet pressure (LP) warning
- low inlet pressure (LP) alarm
- frozen water alarm
- rack probe low temperature warning

With the exception of the unit working life function, the relay logic can also be selected between NO (deafult) and NC.

Relay electrical specifications	Power 500 VA; Voltage 250 V; Current 2 A resistive/inductive		
Relay status and operation	Pump status	Contact open	Pump stopped
		Contact closed	Pump running
	Unit working life	Contact open	Unit off
		Contact closed	Unit on
	Maintenance warning	Contact open	No warnings
		Contact closed	Warnings present
	No water alarm	Contact open	No warnings
		Contact closed	Warnings present
	Low inlet pressure (LP) warning	Contact open	No warnings
		Contact closed	Warnings present
	Low inlet pressure (LP) alarm	Contact open	No alarm
		Contact closed	Alarms present
	Frozen water alarm	Contact open	No alarm
		Contact closed	Alarms present
	Rack probe low temperature warning	Contact open	No warnings
		Contact closed	Warnings present

Tab. 6.v

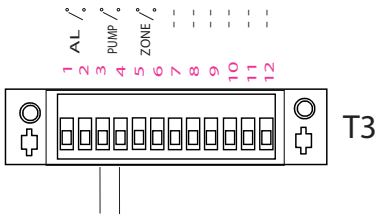

Fig. 6.ae

Connector	Terminals
T3	PUMP

Tab. 6.w

6.6.5 Zone status output

Digital output that indicates the status of the zone (contact closed - zone atomisation active, contact open - zone atomisation not active).

Relay electrical specifications	Power 500 VA; Voltage 250 V; Current 1 A resistive/inductive	
Relay status and operation	Contact open	alarms present
	Contact closed	no alarms present

Tab. 6.x

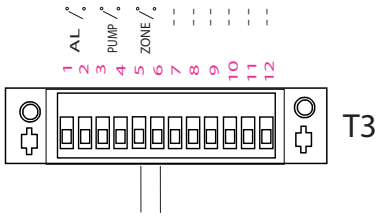

Fig. 6.af

Connector	Terminals
T3	ZONE

Tab. 6.y

7. MAINTENANCE

7.1 Hygienic aspects

Hygiene measures are essential for the safe operation of the humidification system in order to protect the occupants of the building from health risks. In principle, the requirements for air humidification according to VDI 6022-1 must be observed. All tests and measurements shall be documented in a logbook available for inspection. The user is responsible for compliance with local regulations and applicable guidelines. Any risk must be identified, including during installation and maintenance, by the Health and Safety Manager, whose role it is to introduce appropriate and effective control measures.

WARNING: If improperly maintained, the humidification system and the reverse osmosis system could develop the growth of microorganisms in the pipes, including the bacteria responsible for Legionella, which would then be spread into the environment through the aerosol produced by the atomising nozzles of the blower units. Contaminants can settle on surfaces, be inhaled by people or be distributed by ventilation systems. Comply with the inspection schedules listed under "Hygiene measures".

WARNING: Do not keep the humidification system and reverse osmosis system disconnected for more than 48 hours. Without a power supply, the system is unable to perform automatic flushes. Keep the factory-set automatic flushes enabled on both the reverse osmosis unit and the humiFog system. If it is necessary to shut down the system for more than 48 hours by disconnecting the power supply, the procedure described in the section "Shutting down the system" must be followed.

7.1.1 Shutting down the system

Whenever the humidification system is shut down for more than 48 hours, the following steps are required:

- emptying;
- cleaning;
- drying;
- washing before service is restored.

Emptying is automatic thanks to the normally open solenoid valves which, in the absence of power supply or after 48 hours with power supply present, allow drainage by gravity. Make sure that the slopes of the high-pressure pipes are such as to favour the discharge through the appropriate solenoid valves. Disconnect the high-pressure hoses connected to the pumping station and to the distribution manifolds in the AHU or to blower units, check that there is no residual water in them and empty them if necessary. The expansion tank or the storage tank interposed between the reverse osmosis system and the demineralised water inlet to the pumping station must be emptied by opening the appropriate manual valve. Drain the water filter at the pumping station inlet.

As for in-duct humidification, biocides, if used for cleaning purposes, may only be added discontinuously. Thanks to the long time expertise in designing intrinsically safe high pressure systems which automatically prevent water from stagnating, Carel highly recommend not using biocides as a cleaning method of the humidifier components in contact with water, unless in the event of a proven microbiological contamination.

As for direct in-room humidification, cleaning shall be carried out manually or by physical means on surfaces in contact with water, e.g. by hot water or compressed air, but not chemically. Chemical disinfection is only permitted following proven microbiological contamination and must be conducted by qualified personnel in accordance with VDI 6022-6:2018-01 Chapter 9 and any subsequent additions. In such cases, disinfectants that do not pose a health risk and do not promote the development of resistance must be used.

After cleaning the tubes should be dried with compressed air.

When the power supply is restored for humidification system start-up, humiFog will run an automatic washing and filling cycle as per factory settings.

Notice: When restarting the system:

- Check the condition and cleanliness of the water treatment system components.
- Perform a thorough flushing of the distribution system before putting into operation.
- check the cleanliness and/or obstruction of the nozzles, solenoid valves and the entire distribution system.

7.1.2 Hygiene measures

Below is the list of preventive hygiene checks and the frequency with which they must be carried out, as provided by VDI 6022-1 guidelines and applicable to the humiFog system when used for in-duct humidification.

Activity	Action if necessary	1 month	3 months	6 months
Check for contamination, damage, microbial growth, and corrosion	Clean and repair		X	
Check for condensate precipitation in the humidification chamber	Clean and repair	X		
Check for deposits around the nozzle orifice	Clean or replace nozzles	X		
Check drain	Clean and repair		X	
Determine total number of CFUs in humidifier water	If number of CFUs > 1000 CFU/mℓ: (1) clean; (2) rinse and dry tray and other water-carrying areas/ducts; (3) disinfect; (4) test quality of supply water.		X	
Check humidity limit probe operation and intervention	Repair			X

Tab. 7.a

Below is the list of preventive hygiene checks and the frequency with which they must be carried out, as provided by VDI 6022-6 guidelines and applicable to the humiFog system when used for direct in-room humidification.

Activity	Action if necessary	Weekly	2 weeks	3 months	6 months
Visual verification of the absence of biofilm, algae, deposits, excess of atomised water	Clean and repair	X			
Odour-free verification	Clean and repair	X			
Screening test for the determination of the number of colonies by dip slides according to VDI 6022-1, permissible threshold <100 CFU/ml (incubation at 30°C from 48 to 72 h)	Clean and repair			X	
Qualified sample (Legionella <100 CFU/100 ml; Pseudomonas aeruginosa < 100 CFU/100 ml; total CFU at 20°C and 36°C respectively < 150 CFU/ml)	Clean and repair				X
Check for deposits around the nozzle orifice	Clean or replace nozzles				X
Complete draining and drying of the humidifier system at standstill (> 48 h) or during the operation period after 48 h of no humidification demand			X		
Test drain, drain channel, siphon	Clean and repair			X	
Functional test, preventive maintenance	Repair				X
Humidity probe function test and limit probe intervention test if present	Repair				X

Tab. 7.b

If the threshold values in the above table are exceeded, the frequency of the activity should be halved until stable results below the prescribed threshold are obtained. Conversely, if the threshold values are met for at least one year, the inspection intervals can be adapted gradually.
The detection of biofilm in equipment is always evidence of microbiological contamination and consequent risk to human health. This outcome is critical and necessarily requires the following immediate actions:

1. shutting down the system;
2. removal of biofilm by means of an appropriate cleaning technique;
3. microbiological testing of the surface and disinfection, where the result of the microbiological testing indicates contamination;
4. determination of the cause of biofilm formation;
5. long-term elimination of the identified cause;
6. if the cause cannot be eliminated, the humidification system must be taken out of service.

It is possible to use the thermal disinfection technique in advance by bringing the water to 70°C (158°F) and keeping it in the system for at least 3 minutes. Only after proven microbiological contamination are disinfection techniques and listed chemical disinfectants permitted (see Robert Koch Institute website). The effectiveness of alternative techniques must be verified and demonstrable. The success of the disinfection operation must be proven by appropriate microbiological tests.

7.2 Routine maintenance

IMPORTANT: before carrying out any maintenance operations, disconnect the power supply by moving the main system switch and the main switch on the appliance to "off".

IMPORTANT: maintenance on the product must be performed by an authorised company that, once the work has been completed, issues the owner a declaration of conformity that the work has been carried out in compliance with the national and local standards in force and the instructions provided by CAREL in the manual supplied with the appliance.

IMPORTANT: maintenance must be carried out on the pumping station at least once a year.

IMPORTANT: routine maintenance on the pumping station and the humidification system should be performed at the recommended intervals specified in this paragraph. These maintenance operations must only be carried out by qualified personnel.

Routine maintenance is recommended every 3 months, and mainly involves a visual inspection to check that the main components are working correctly.

Below is a list of suggested operations:

- **Check the conditions of the inlet water filter.**
  The filter cartridge should be replaced once a year. To change the cartridge, switch the unit off and shut-off the feedwater supply line. Empty the filter through the small valve at the bottom. Unscrew the housing from the top ring nut using the tool supplied. Remove the filter cartridge from inside the housing and insert a new one (P/N ACKF100000SP). Screw the housing back on, making sure that the O-ring is still in good condition, to ensure tightness. Close the valve at the bottom of the filter housing and turn the water supply back on.

- **Check the pump oil level.**
  Use the dipstick on the yellow pump cap to visually check the oil level. The oil level is correct when measured in the curved portion of the dipstick. If the level is lower than the minimum level shown in the figure, top up with oil to restore the correct level (oil part number UAKOIL0000SP). Generally, the oil level should remain constant and there should be no need to top it up periodically.

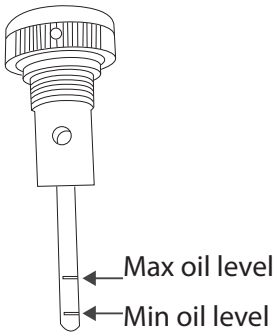

Fig. 7.a

- **Check** that there are no water leaks both inside the cabinet and on the distribution line and on the fittings.

7.3 One-off service and repairs

One-off service and repairs are performed in the event of malfunctions or breakages of certain components. The components that are susceptible to breakage are listed below:

- solenoid valves
- pressure reducer
- pressure switches
- pump motor
- pump
- electronic controller
- fuses
- nozzles
- nozzle manifold
- blower fan

To replace these components, to contact authorised specialist personnel.
To identify the spare part code, see chapter 10 Annexes.

7.4 Pump maintenance

The pump is the most complex mechanical device inside the pumping station, as well as the heart of the high pressure system. It therefore requires specific regular maintenance, comprising the activities described below.

Pump		
Check/replace	**monthly**	**every 1000 h (*)**
check oil level	X	
check/change oil		X
check/replace gaskets and valves		X

Tab. 7.c

7.4.1 Oil change

IMPORTANT: change the oil in the pump (P/N UAKOIL0000SP) after the first 50 operating hours. Failure to change the oil after the first 50 hours can cause damage to the pump and shorten its working life. In fact, the oil supplied with the pump tends to accumulate debris due to transport and initial operation, and cannot guarantee a longer working life.

IMPORTANT: if no leaks or malfunctions are found during the "1000 h" check, replacement may be postponed.

(*) In normal operating conditions, except for the first oil change after 50 hours, the oil needs to be changed every 3000 operating hours. Every 1000 hours, a notification is generated by the electronic controller, while the 3000 operating hours are signalled by the electronic controller via the "3000 hour maintenance" alarm on the display. To change the oil, see the specific maintenance and spare parts manual.

7.4.2 Replace gaskets and valves

The replacement of seals and valves is to be carried out every 3000 hours, duly indicated by the display alarm "3000 hours maintenance". However, under particular stress conditions it may occur that replacement is necessary before the indicated time interval. During system start-up after a prolonged period of time, amounting to several months, between the time of installation and the time of start-up, if the pump fails to pressurise the water correctly, it may be necessary to replace the valves after checking for any water leaks from the system. It is recommended to check the working status of the pump every 1000 operating hours (appropriately signalled by a warning). If the pump is excessively noisy, or if it is unable to reach the required operating pressure (70 bar), or if water drips between the pump body and the pump head, it may be necessary to replace the seals and valves after a shorter period of time. Valves and seals are consumable parts, and their wear and tear cannot be attributed to product malfunctions. For the replacement of seals and valves, please refer to the maintenance and spare parts manual.

7.4.3 50 hour oil change warning

The first "oil change required" warning for maintenance is signalled after 50 hours of operation: this indicates that an oil change is required. The warning typically appears a few days after starting the system. Therefore, when first operating the appliance, make sure a bottle of oil is available for the first oil change, and that the procedure for changing the oil is clearly understood. The warning can be easily reset by pressing the "alarm" button on the user interface. For practical reasons, the warning can also be reset after 40 hours of operation (but not any earlier). After changing the oil, the unit's hour counter needs to be reset.

7.4.4 Maintenance warning, reset hour counter

After 1000 hours of operation, humiFog generates a "1000 hour maintenance" notification. This alerts the user to check that the system is working properly. If the pump is able to reach the rated operating pressure (70 bars), no action is required. The notification can be easily reset by pressing the "alarm" button on the user interface. The same occurs after 2000 hours of operation. After 3000 hours of operation, on the other hand, humiFog generates a "3000 hour maintenance" alarm. In this case, work needs to be performed on the unit, changing the oil and replacing the pump gaskets and valves (as described in the previous paragraphs). Then reset the alarm and reset the unit hour counter. If for some reason the gaskets and valves need to be replaced before 3000 hours of operation, the hour counter also needs to be reset. Whenever the gaskets and valves are replaced, it is also recommended to change the oil before resetting the hour counter.

8. TECHNICAL DATA

8.1 Technical specifications

	UA1500D50*	UA3000D50*	UA5000D50*	UA8000L50*	UA1K20L50*
ENVIRONMENTAL CONDITIONS					
Operating temperature (°C)	5 to 40°C				
Operating humidity (rH)	0 to 90% non-condensing				
Storage temperature (°C)	-10 to 50°C				
Storage humidity (rH)	0 to 90% non-condensing				
Ingress protection	IP20				
WATER CIRCUIT DATA					
Maximum flow-rate (kg/h)	150 kg/h	300 kg/h	500 kg/h	800 kg/h	1200 kg/h
Water conductivity (µS/cm)	<50 µS/cm				
Feedwater pressure (bars)	2 to 5 bars				
Water temperature (°C)	5 to 20°C				
Feedwater connection	G3/4"F				
Outlet	M16x1.5 male			M22x1.5 male	
Main drain	G1/4"F				
Oil collection tank drain	Ø12 mm				
PHYSICAL SPECIFICATIONS					
Weight (kg)	94	95	105	117	116
Dimensions w x d x h	850 x 480 x 945				
Height (mm)	945				
Height with panel open (mm)	1250				
Width (mm)	850				
Depth (mm)	480				
Clearance at top (mm)	500				
Clearance at sides (mm)	500				
Clearance at front (mm)	1000				
ELECTRICAL SPECIFICATIONS					
Power supply voltage (Vac)	230 V (±10%)			400 V (±10%)	
Phases	1			3	
Frequency (Hz)	50/60 Hz (±1%)				
Power (kW)	0.955 kW	1.55 kW	1.95 kW	4 kW	5 kW
Current (A)	7 A	9.2 A	12 A	4.6 A	5.6 A
Cable size at terminal (mm²)	2.5 mm2				
SCCR (kA)	5 kA				
CONTROLLER SPECIFICATIONS					
Type	c.pCO				
Probe inputs	0 to 1 Vdc, 0 to 10 Vdc, 2 to 10 Vdc, 0 to 20 mA, 4 to 20 mA, NTC				
Serial communication	three-wire RS485 / Fieldbus / BMS				
Communication protocol	Modbus / BACNET				
USB port	1 type A USB port				
Ethernet port	2 Ethernet ports				

Tab. 8.a

8.2 Terminal tightening torque

Ref.	Tightening torque (Nm)
Single terminal	5.3 min to 7 max
Double terminal	5.3 min to 7 max
Terminal with fuse	13 min to 16 max
Earth terminal	13 min to 16 max

Tab. 8.b

8.3 Fuse chart

	Pumping station				
Fuse	UA1500D5**	UA3000D5**	UA5000D5**	UA8000L5**	UA1K20L5**
F1	1A T 5x20 250 V	1A T 5x20 250 V	1A T 5x20 250 V	1A T 10.3x38 500 V	1A T 10.3x38 500 V
F2	1A T 5x20 250 V	1A T 5x20 250 V	1A T 5x20 250 V	1A T 10.3x38 500 V	1A T 10.3x38 500 V
F3	4A T 5x20 250 V	4A T 5x20 250 V	4A T 5x20 250 V	4A T 10.3x38 500 V	4A T 10.3x38 500 V
F4	4A T 5x20 250 V	4A T 5x20 250 V	4A T 5x20 250 V	4A T 10.3x38 500 V	4A T 10.3x38 500 V
F5	4A T 5x20 250 V	4A T 5x20 250 V	4A T 5x20 250 V	4A T 5x20 250 V	4A T 5x20 250 V
F6	12A T 10.3x38 500 V	20A F 10.3x38 500 V	25A F 10.3x38 500 V	25A F 10.3x38 500 V	25A F 10.3x38 500 V
F7	12A T 10.3x38 500 V	20A F 10.3x38 500 V	25A F 10.3x38 500 V	25A F 10.3x38 500 V	25A F 10.3x38 500 V
F8	-	-	-	25A F 10.3x38 500 V	25A F 10.3x38 500 V
F9	20A F 10.3x38 500 V	20A F 10.3x38 500 V	20A F 10.3x38 500 V	25A F 10.3x38 400 V	25A T 10.3x38 400 V
F10-F23	6.3A T 5x20 250 V	6.3A T 5x20 250 V	6.3A T 5x20 250 V	6.3A T 5x20 250 V	6.3A T 5x20 250 V

Tab. 8.c

9. CHECK LIST

Final installation checklist			
1. Installation site		Yes	No
1.a	Temperature range 1 – 40 °C (34 – 104 °F).		
1.b	Protected against rain and humidity.		
1.c	Protected against direct sunlight.		
2. Water line		Yes	No
2.a	All water connections fitted correctly.		
2.b	Materials compatible for use with water treated by reverse osmosis (stainless steel/plastic).		
2.c	Piping on pumping station feedwater line suitable for an operating pressure range of 2 to 5 bars.		
2.d	Piping of water outlet line from pumping station to the atomisation system suitable for pressures of up to 100 bars.		
2.e	Length of the outlet line from the pumping station to the atomisation system within the limits specified by the manufacturer (par. 5.2).		
2.f	NOL drain solenoid valves installed at the lowest points of the circuit to facilitate drainage of water (Fig. 5.c).		
2.g	Drain pipe and drain tank installed in accordance with the manufacturer's instructions (par. 4.2).		
3. Electrical connections		Yes	No
3.a	Solenoid valves wired n accordance with the manufacturer's instructions (par. 6.2).		
3.b	Connection cables suitably sized for the maximum distance between the pumping station or the zone controller and the rack (par. 6.3).		
3.c	Enabling and control signals wired in accordance with the manufacturer's instructions (par. 6.4).		
3d	Ethernet connection in accordance with the manufacturer's instructions.		
4. Droplet separator		Yes	No
4.a	Double droplet separator at a distance of 80 mm (3.15").		
4.b	Size of the drain tank underneath the separator from 200 to 500 mm (7.87" to 19.70").		
4.c	Separator installed in accordance with the manufacturer's instructions provided in the quick guide +0500066IE, depending on the type: - single layer 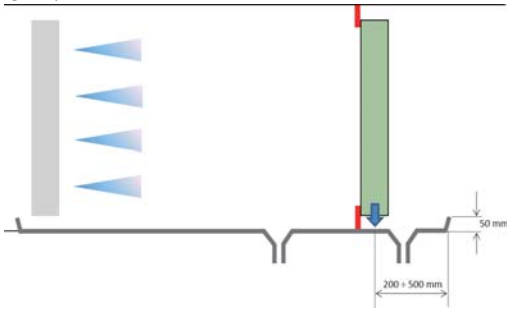 - double layer 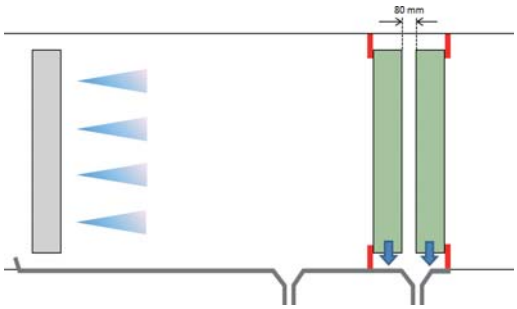 - double layer 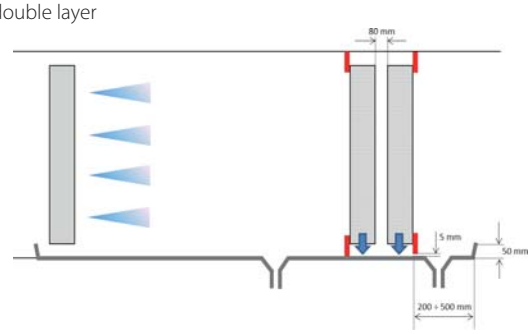 		

10. ANNEXES

Annex A: Wiring diagrams

Single-phase power supply: UA150* - UA300* - UA500*

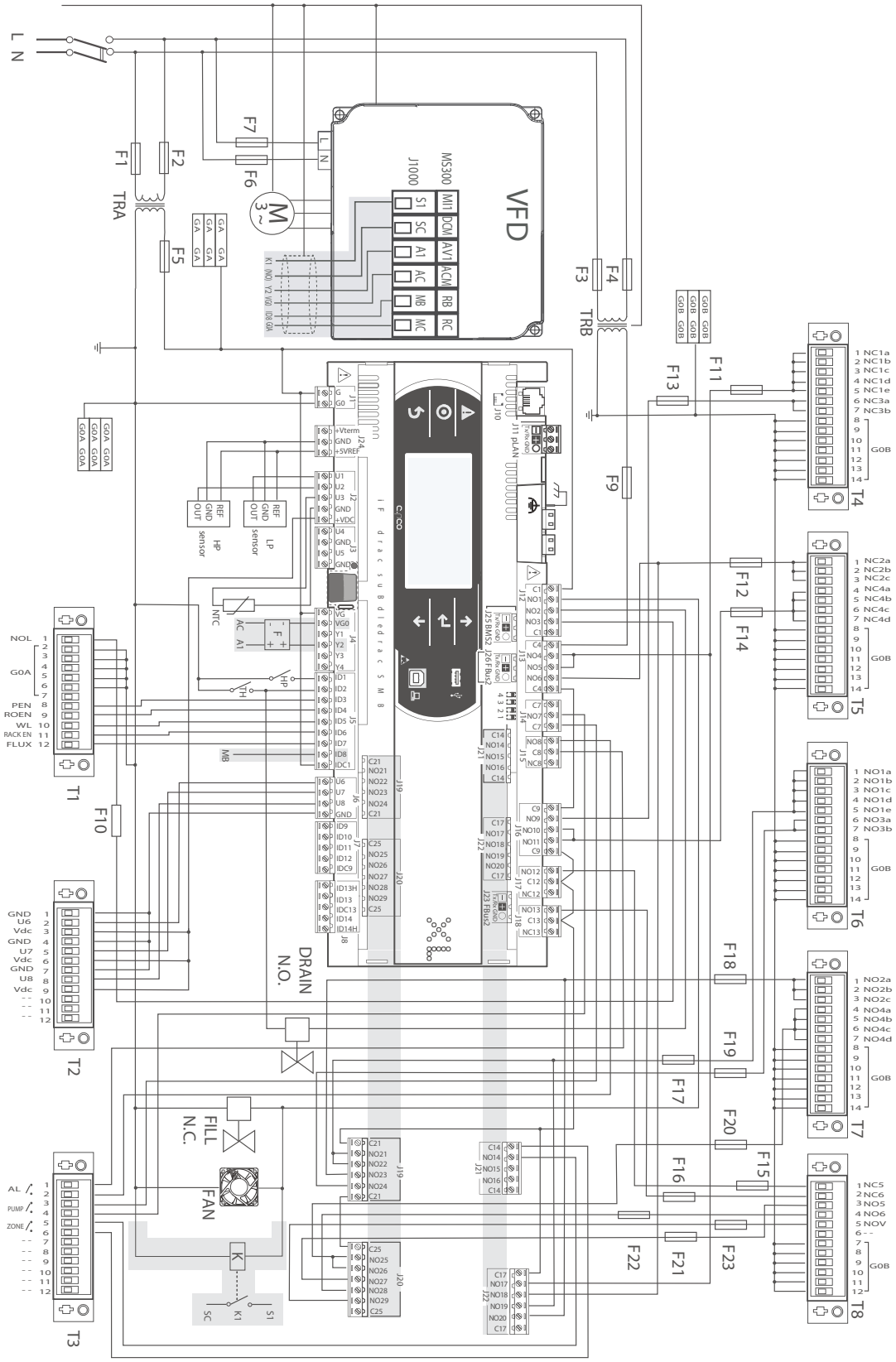

Fig. 10.a

Three-phase power supply: UA800* - UA1K2*

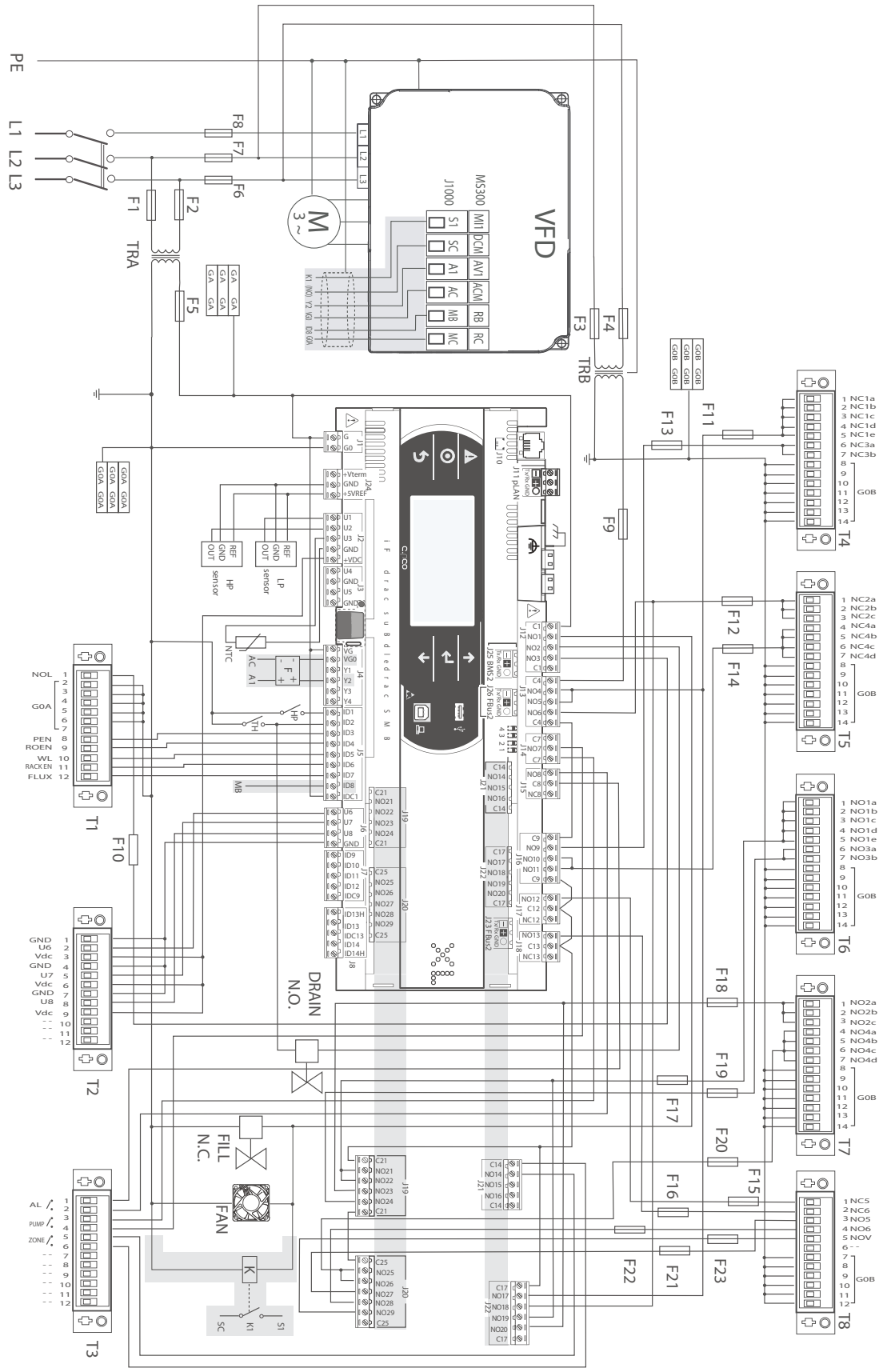

Fig. 10.b

Annex B: Accessories and spare parts kits

1 Mechanical/electrical parts

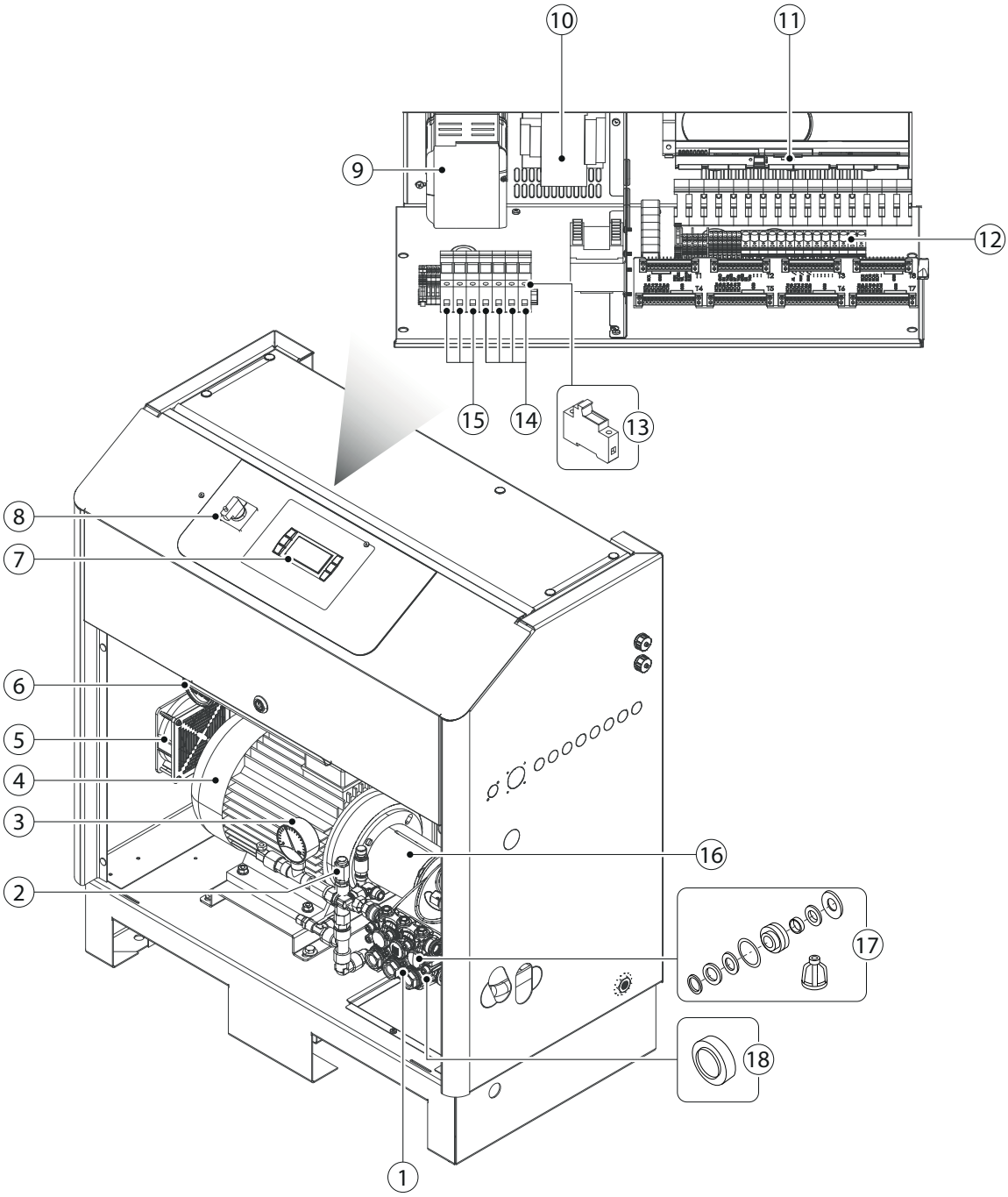

Fig. 10.c

Part number	Description	Ref. figure	Q.Ty per humidifier
UAKP150T00SP	Brass pump for UA150	1	
UAKP300T00SP	Brass pump for UA300	1	
UAKP500T00SP	Brass pump for UA500	1	
UAKP800T00SP	Brass pump for UA800	1	
UAKP1K2T00SP	Brass pump for UA1K2	1	
UAKP150T01SP	Stainless steel pump for UA150	1	
UAKP300T01SP	Stainless steel pump for UA300	1	
UAKP500T01SP	Stainless steel pump for UA500	1	
UAKP800T01SP	Stainless steel pump for UA800	1	
UAKP1K2T01SP	Stainless steel pump for UA1K2	1	
UAKCV0HP00	Pressure control bypass valve, brass	2	
UAKCV0HP01	Pressure control bypass valve, stainless steel	2	
UAKMWHP001	Pressure gauge, 0 to 100 bars	3	
UAKM075T50SP	Electric motor for UA150*D, 50-60 Hz CE	4	
UAKM150T50SP	Electric motor for UA300*D, 50-60 Hz CE	4	
UAKM220T50SP	Electric motor for UA500*D, 50-60 Hz CE	4	
UAKM300T50SP	Electric motor for UA800*L, 50-60 Hz CE	4	
UAKM400T50SP	Electric motor for UA1K2*L, 50-60 Hz CE	4	
URKFANL200	Unit cooling fan	5	
ECKMA10000	Pressure gauge, 0 to 10 bars	6	
PGNE000F00	Non-touch display	7	
UAKINT0000	Main switch	8	
UAKVFD0155SP	Variable frequency driver UA150**5	9	
UAKVFD0305SP	Variable frequency driver UA300**5	9	
UAKVFD0505SP	Variable frequency driver UA500**5	9	
UAKVFD0805SP	Variable frequency driver UA800**5	9	
UAKFVD1K25SP	Variable frequency driver UA1K2**5	9	
URKTR10000	100 VA 230/400V 24V transformer	10	
UAKTRB0000	400 VA 208/230V 24V transformer	10	
UAKTRB1000	600 VA 230V/400/460/24V transformer	10	
UAKCPCO000SP	Electronic controller for UA*5* pumping station	11	
UAKFUSEVA0	Solenoid valve fuse kit	12	
URKFH10000	2-pole fuse holder	13	
URKFH20000	3-pole fuse holder	13	
UAKFTR0AC0SP	Transformer fuse kit for UA150-300-500 CE	14	
UAKFTR0DE0SP	Transformer fuse kit for UA800-1K2 CE	14	
UAKFVFDA00SP	Inverter fuse kit for UA150 CE	15	
UAKFVFDBE0SP	Inverter fuse kit for UA300-500-800-1K2 CE	15	
UAK0BMC150SP	Pump-motor coupling and flange for UA150	16	
UAK0BMC300SP	Pump-motor coupling and flange for UA300	16	
UAK0BMC500SP	Pump-motor coupling and flange for UA500	16	
UAK0BMC800SP	Pump-motor coupling and flange for UA800	16	
UAK0BMC1K2SP	Pump-motor coupling and flange for UA1K2	16	
UAKVGO1502SP	Gasket and valve kit for UA150-300-500 with brass pump	17	
UAKVGO1802SP	Gasket and valve kit for UA800 with brass pump	17	
UAKVGO2202SP	Gasket and valve kit for UA1K2 with brass pump	17	
UAKVGX1502SP	Gasket and valve kit for UA150-300-800 with stainless steel pump	17	
UAKVGX1802SP	Gasket and valve kit for UA800 with stainless steel pump	17	
UAKVGX2202SP	Gasket and valve kit for UA1K2 with stainless steel pump	17	
UAKAR00001SP	Oil seal kit for UA150-300-500-800-1K2*5*0 brass, UA1K2*5*1 stainless steel	18	
UAKAR00002SP	Oil seal kit for UA150-300-500-800 stainless steel	18	
UAKVG000EX	Extractor rod for UA****5 gaskets and valves		
UAKVG015EX	Seal and valve extractor for UA150-300-500		
UAKVG022EX	Seal and valve extractor for UA800		
UAKVG018EX	Seal and valve extractor for UA1K2		
UAKVGX15IN	Gasket and valve inserter for UA150-300-500 with stainless steel pump		
UAKVGX18IN	Gasket and valve inserter for UA800 with stainless steel pump		
UAKVGO15IN	Gasket and valve inserter for UA150-300-500 with brass pump		
UAKVGO18IN	Gasket and valve inserter for UA800 with brass pump		
UAKVG022IN	Gasket and valve inserter for UA1K2 with stainless steel and brass pump		
UAKART0001	UA150-300-500-800 brass oil seal extractor and inserter		
UAKART0002	UA1K2 stainless steel and brass oil seal extractor and inserter		
UAKART0003	UA150-300-500-800 stainless steel oil seal extractor and inserter		

Tab. 10.a

2 Water circuit parts

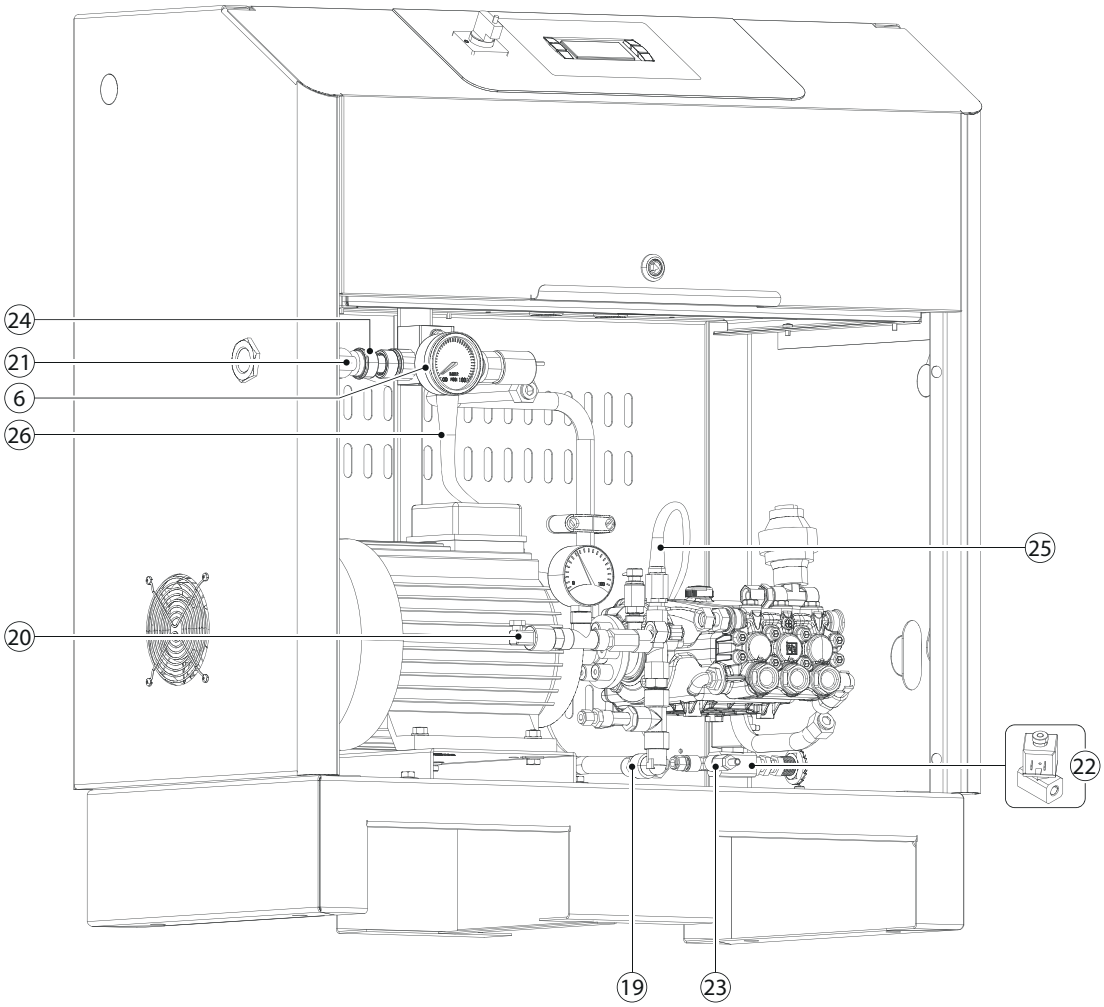

Fig. 10.d

Part number	Description	Ref. figure	Quantity per humidifier
UAKTS00000SP	High temperature thermostat	19	
UAKPSHP000	High pressure switch (HP)	20	
ECKFSV0000	Water fill solenoid valve for UA*4, UA*D, EC*, UA1505*, UA3005*, UA5005*	21	
MCKFSVAC00	Water fill solenoid valve for UA8005*, UA1K25*, brass	21	
UGKEVOUT00SP	Water fill solenoid valve for UA8005*, UA1K25*, stainless steel	21	
UAKCV0DR00	Cabinet drain solenoid valve, brass	22	
UAKCV0DR01	Cabinet drain solenoid valve, stainless steel	22	
UAKSAFVAL0	Safety valve	23	
UAKRACLP01SP	PVC low pressure fittings kit	24	
UAKTRAS05V	0-5 V high pressure probe	25	
SPKT0013P0	Low pressure probe	26	
SPKT0011S0	Low pressure probe	26	
UAKOIL0000SP	Oil for humiFog pump	-	

CAREL INDUSTRIES - Headquarters
Via dell'Industria, 11 - 35020 Brugine - Padova (Italy)
Tel. (+39) 049.9716611 - Fax (+39) 049.9716600
e-mail: carel@carel.com - www.carel.com

humiFog +0300111EN rel. 1.2 - 05.11.2024