humiSonic

Ultrasonic humidiers

ventilation - duct version

CAREL

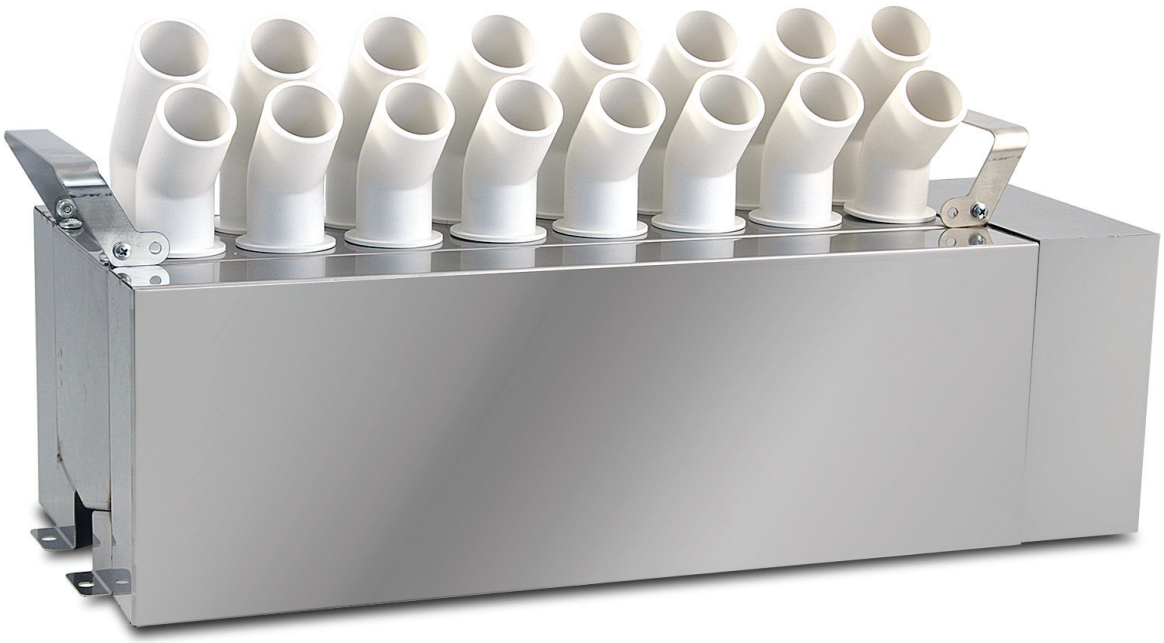

ENG

User manual

LEGGI E CONSERVA QUESTE ISTRUZIONI

READ AND SAVE THESE INSTRUCTIONS

NO POWER & SIGNAL CABLES TOGETHER

READ CAREFULLY IN THE TEXT!

WARNINGS

CAREL humidifiers are advanced products, whose operation is specified in the technical documentation supplied with the product or can be downloaded, even prior to purchase, from the website www.carel.com. Each CAREL product, in relation to its advanced level of technology, requires setup/configuration/programming/commissioning to be able to operate in the best possible way for the specific application. The failure to complete such operations, which are required/indicated in the user manual, may cause the final product to malfunction; CAREL accepts no liability in such cases.
The customer (manufacturer, developer or installer of the final equipment) accepts all liability and risk relating to the configuration of the product in order to reach the expected results in relation to the specific final installation and/or equipment. CAREL may, based on specific agreements, act as a consultant for the installation/commissioning/use of the unit, however in no case does it accept liability for the correct operation of the humidifier and the final installation if the warnings or suggestions provided in this manual or in other product technical documents are not heeded. In addition to observing the above warnings and suggestions, the following warnings must be heeded for the correct use of the product:

- *DANGER OF ELECTRIC SHOCK : The humidifier contains live electrical components. Disconnect the mains power supply before accessing inside parts or during maintenance and installation.*
- *DANGER OF WATER LEAKS: The humidifier automatically and constantly fills/drains certain quantities of water. Malfunctions in the connections or in the humidifier may cause leaks.*

***Important**:*

- *Environmental and power supply conditions must conform to the values specified on the product rating labels.*
- *Only qualified personnel who are aware of the necessary precautions and able to perform the required operations correctly may install, operate or carry out technical service on the product.*
- *Only water with the characteristics indicated in this manual must be used for atomized water production.*
- *All operations on the product must be carried out according to the instructions provided in this manual and on the labels applied to the product. Any uses or modifications that are not authorised by the manufacturer are considered improper. CAREL declines all liability for any such unauthorised use.*
- *Do not attempt to open the humidifier in ways other than those specified in the manual.*
- *Observe the standards in force in the place where the humidifier is installed.*
- *Keep the humidifier out of the reach of children and animals.*
- *Do not install and use the product near objects that may be damaged when in contact with water (or condensate). CAREL declines all liability for direct or indirect damage following water leaks from the humidifier.*
- *Do not use corrosive chemicals, solvents or aggressive detergents to clean the inside and outside parts of the humidifier, unless specifically indicated in the user manual.*
- *Do not drop, hit or shake the humidifier, as the inside parts and the linings may be irreparably damaged.*

CAREL adopts a policy of continual development. Consequently, CAREL reserves the right to make changes and improvements to any product described in this document without prior warning. The technical specifications shown in the manual may be changed without prior warning.The liability of CAREL in relation to its products is specified in the CAREL general contract conditions, available on the website www.carel.com and/or by specific agreements with customers; specifically, to the extent where allowed by applicable legislation, in no case will CAREL, its employees or subsidiaries be liable for any lost earnings or sales, losses of data and information, costs of replacement goods or services, damage to things or people, downtime or any direct, indirect, incidental, actual, punitive, exemplary, special or consequential damage of any kind whatsoever, whether contractual, extra-contractual or due to negligence, or any other liabilities deriving from the installation, use or impossibility to use the product, even if CAREL or its subsidiaries are warned of the possibility of such damage.

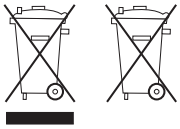

1 2

DISPOSAL

Please read and keep these instructions.
The humidifier is made up of metal parts and plastic parts. With reference to European Union directive 2012/19/EU issued on 4 July 2012 and related national legislation, please note that:

1. Waste Electrical and Electronic Equipment (WEEE) cannot be disposed of as municipal waste but must be collected separately so as to allow subsequent recycling, treatment or disposal, as required by law;
2. users are required to take Electrical and Electronic Equipment (EEE) at end-of-life, complete with all essential components, to the WEEE collection centres identified by local authorities. The directive also provides for the possibility to return the equipment to the distributor or retailer at end-of-life if purchasing equivalent new equipment, on a one-to-one basis, or one-to-zero for equipment less than 25 cm on their longest side;
3. the equipment may contain hazardous substances: the improper use or incorrect disposal of such may have negative effects on human health and on the environment;
4. the symbol (crossed-out wheeled bin, see Figure 1), is shown on the product or on the packaging, indicates that the equipment must be disposed of separately at end-of-life;
5. if at end-of-life the EEE contains a battery (Figure 2), this must be removed following the instructions provided in the user manual before disposing of the equipment. Used batteries must be taken to appropriate waste collection centres as required by local regulations;
6. in the event of illegal disposal of electrical and electronic waste, the penalties are specified by local waste disposal legislation.

Warranty on materials: 2 years (from the date of production, excluding consumables).

Approval: the quality and safety of CAREL products are guaranteed by the ISO 9001 certified design and production system, as well as by the CE and WaterMark mark.

Content

1. INTRODUCTION AND ASSEMBLY 7

1.1 humiSonic (UU0*D) 7
1.2 Part numbers 7
1.3 Dimensions and weights 7
1.4 Opening the packaging 7
1.5 Material supplied 7
1.6 Preparing for assembly 7
1.7 Assembly 8
1.8 Identification label 8
1.9 Functional diagram 8
1.10 Operating principle 9
1.11 Accessories 9
1.12 Structure 9

2. WATER CONNECTIONS 10

2.1 Warnings 10
2.2 Water connections (parts not included) 10
2.3 Positioning 10
2.4 Water connections 10
2.5 Feedwater 11
2.6 Drain water 11

3. ELECTRICAL CONNECTIONS 12

3.1 Humidifier electrical connections 12
3.2 Functional wiring diagram 13
3.3 "Secondary" electrical panel 14
3.4 "Secondary" panel wiring diagram 15
3.5 "Main" electrical panel 16
3.6 "Main" panel wiring diagram 17
3.7 Electrical connections to the "Secondary" panel 18
3.8 Connection cable sizing 18
3.9 Electrical connect. to the "Main" panel 19
3.10 Control types 19

4. STARTING AND USER INTERFACE ("SECONDARY" PANEL) 20

4.1 Starting 20
4.2 Shutdown / Standby 20
4.3 Autotest 20
4.4 Signal lights on the "Secondary" panel 20
4.5 Disabling 20
4.6 Reset tank hour counter 20
4.7 Automatic washing 20
4.8 Washing due to inactivity 20

5. USER INTERFACE ("MAIN" PANEL) 21

5.1 Graphic terminal 21
5.2 Keypad 21
5.3 Display 21
5.4 Programming mode 22
5.5 Setting/displaying the user parameters 22
5.6 Setting the Service parameters 22
5.7 Quick access menus 23

6. COMMISSIONING ("MAIN" PANEL) 24

6.1 Starting 24
6.2 Scheduler 24
6.3 Regulation type 24
6.4 Shutdown / Standby 24
6.5 Autotest 24
6.6 Reset tank hour counter 24
6.7 Automatic washing 24
6.8 Manual procedures 24
6.9 Probe calibration 25
6.10 Access management 25
6.11 Settings 25
6.12 Network settings 25

7. FUNCTIONS ("MAIN" PANEL) 26

7.1 On/Off 26
7.2 Set point 26
7.3 Regulation (control) 26
7.4 Probe alarms 27
7.5 Flow-rate modulation 27
7.6 Washing 28
7.7 Timings 29

8. PARAMETERS TABLE ("MAIN" ELECTR. PANEL) 31

8.1 Supervisor variable list 34
8.2 Production control via network 36
8.3 Network washing activation 36

9. ALARMS 37

9.1 Types of alarms 37
9.2 Alarm table 37
9.3 Troubleshooting 38

10. MAINTENANCE AND SPARE PARTS 39

10.1 Electrical components 39
10.2 Mechanical components 39
10.3 System information 40
10.4 Maintenance 40
10.5 Maintenance operations 40
10.6 Maintenance intervals 40
10.7 Replacing the components 40
10.8 Cleaning the tank 41

11. GENERAL FEATURES AND MODELS 42

11.1 Ultrasonic humidifier models and electrical specifications 42
11.2 Cable cross-section 42
11.3 Technical specifications 42
11.4 Fuse table 43

12. MULTI-UNITS INSTALLATION 43

12.1 Connection Main-Secondary (until 4 humisonics) 43
12.2 Connection multi-Main (until 4 Mains) 46

13. DUCT INSTALLATION 48

1. INTRODUCTION AND ASSEMBLY

1.1 humiSonic (UU0*D)

Range of ultrasonic adiabatic humidifiers for direct humidification in ducts or air handling units. humiSonic is particularly suitable for many applications in which optimisation of room humidity is an essential factor for personal comfort and the quality of goods. The humidifiers are controlled by an external electrical panel. Depending on the required functions, this can be the "Secondary" (ON/OFF, status signal, remote ON/OFF) or "Main" model (user interface and programming).

1.2 Part numbers

humisonic P/N	Description
UU(XY)DD0000	without auxiliary card, without humidity probe

Tab. 1.a

(XY) = **02** → 2,4 kg/h (5.3 lbs/h), **05** → 4,8 kg/h (10.6 lbs/h), **07** → 7,2 kg/h (15.8 lbs/h), **09** → 9,6 kg/h (21.1 lbs/h), **14** → 14,4 kg/h (31.7 lbs/h), **18** → 18 kg/h (39.6 lbs/h)

Elect. panel P/N	Description
UQ(XY)B(*)0000	"Secondary" electrical panel
UQ(XY)C(*)0000	"Main" electrical panel

Tab. 1.b

(XY) = **05** → fino a 4,8 kg/h (10.6 lbs/h), **09** → fino a 9,6 kg/h (21.1 lbs/h), **18** → fino a 18 kg/h (39.6 lbs/h)
(*) = **D** → alimentazione 230 Vac, **1** → alimentazione 110 Vac

Note: for the table of humidifier/electrical panel combination, see the chapter "General features and models".

1.3 Dimensions and weights

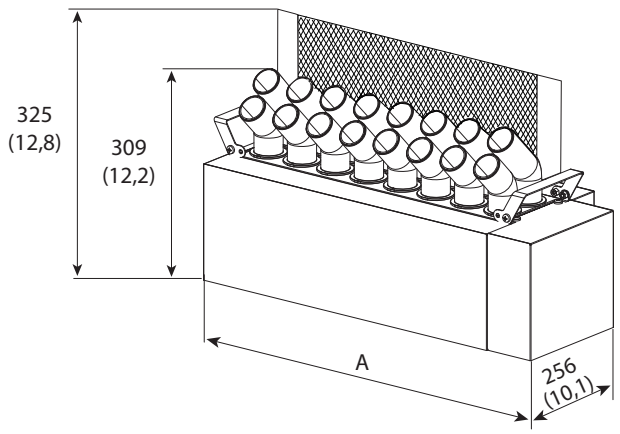

Fig. 1.a

Model	UU02	UU05	UU07
Production kg/h (lbs/h)	2,4 (5.3)	4,8 (10.6)	7,2 (15.8)
Height with baffle mm (in)	325 (12.8)		
Height mm (in)	309 (12.2)		
Depth mm (in)	256 (10.1)		
Width A mm (in)	261 (10.3)	386 (15.2)	511 (20.1)
Weight kg (lb)			
packaged	5,9 (13)	7,4 (16.3)	9,5 (20.9)
empty	4,9 (10.8)	6,4 (14.1)	8 (17.6)
installed*	5,7 (12.6)	8,4 (18.5)	10,8 (23.8)

Model	UU09	UU14	UU18
Production kg/h (lbs/h)	9,6 (21.1)	14,4 (31.7)	18 (39.6)
Height with baffle mm (in)	325 (12.8)		
Height mm (in)	309 (12.2)		
Depth mm (in)	256 (10.1)		
Width A mm (in)	636 (25.0)	886 (34.9)	1074 (42.3)
Weight kg (lb)			
packaged	11 (24.2)	14,7 (32.4)	17,8 (39.2)
empty	9,5 (20.9)	12,7 (28.0)	15,8 (34.8)
installed*	13,1 (28.9)	18,3 (40.3)	23 (50.7)

Tab. 1.c

* in normal operating conditions, filled with water.

1.4 Opening the packaging

- make sure the humidifier is intact upon delivery and immediately notify the transporter, in writing, of any damage that may be due to careless or improper transport;
- move the humidifier to the site of installation before removing from the packaging, grasping the neck from underneath;
- open the cardboard box, remove the protective material and remove the humidifier.

1.5 Material supplied

Make sure the following are included:
1. baffle with 2 bolts;
2. user manual.

1.6 Preparing for assembly

Important: avoid installing the humidifier in the duct in a position where it may get wet.

- The unit is designed for assembly in compact air-conditioning units, ventilation systems and air ducts;
- To ensure a very short free path, the atomised water needs to be delivered as uniformly as possible along and across the duct or the unit;
- Install the humidifier in position where it is easily accessible/removable for maintenance or repairs;
- Leave at least 50 mm (2 in) from the bottom of the duct to ensure air enters the humidifier through the rear intake;
- Make an inspection opening on the wall of the ducting;
- To maximise absorption of atomised water in the air flow, for air handling units with fan that:
  - is centrifugal, remove the deflector (D),
  - is axial or tangential, install the deflector (D).

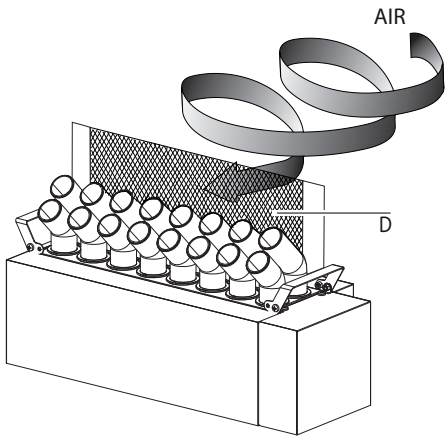

Fig. 1.b

- Place a drain tank underneath the humidifier to collect any condensate; this must be at least 0.6 m (2 ft) long and cover the free path. Install a drain line with drain trap: the height of the drain trap must exceed the system static pressure to ensure adequate draining of the tank.

- Air velocity in the duct must be between 1.5 and 3 m/s (295 e 590 fpm), so that the atomised water is rapidly dispersed. In the event of faster air flows, the cross-section of the duct must be increased so that the velocity is within the allowed range. The length of the widened section must be at least 0.6 m (2 ft) beyond the humidifier in the direction of air flow, so as to minimise condensation on the walls of the ducting or air handling unit.

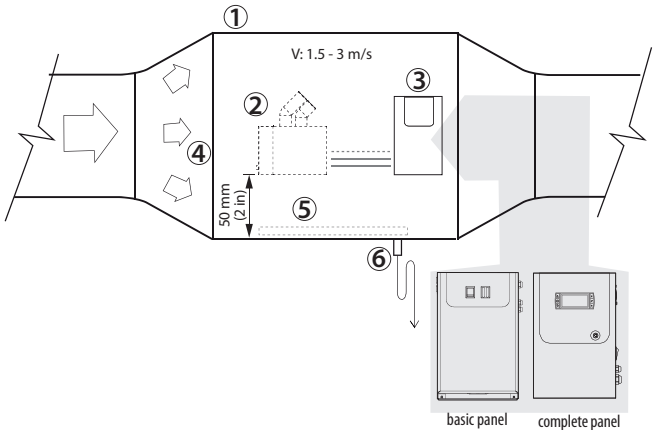

Fig. 1.c

Key

1	Stainless steel duct	4	Air flow
2	Humidifier	5	Condensate collection basin
3	Control panel (external)	6	Drain trap

Important:
1. Choose the installation position so that the air flow disperses the atomised water uniformly;
2. Make sure that the supporting surface is able to support the weight of the unit.

The humidifier can only be activated (atomised water production) when the air handling unit fan is running. NEVER start atomised water production without air flow in the duct: this may damage one or more parts of the appliance.

1.7 Assembly

The appliance must be assembled on a horizontal support. Check correct positioning using a spirit level.

Procedure:
1. Unscrew the screws (A) and remove the right side cover (B);

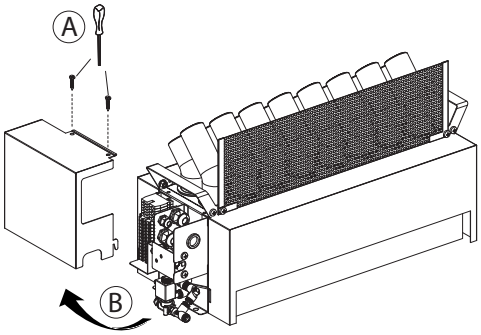

Fig. 1.d

2. Secure the humidifier to the horizontal support using the fastening brackets on the right and left sides;

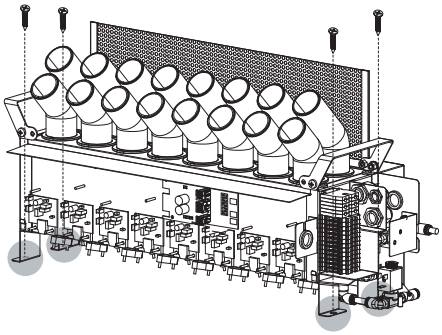

Fig. 1.e

Important:
1. Install the humidifier in horizontal position, using a spirit level, so that the level sensor does not give a false reading;
2. Carefully secure the unit so that it does not move during operation.

1.8 Identification label

The humidifiers are identifiable from the packaging label and the identification label on the side.

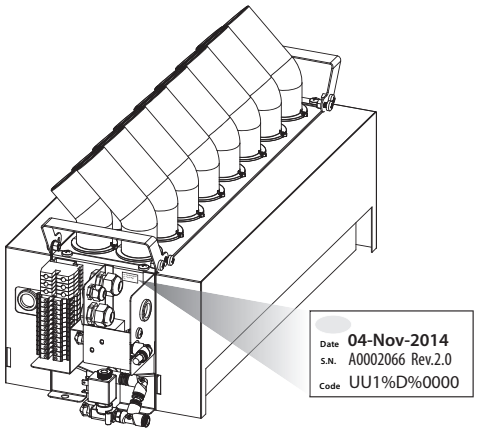

Fig. 1.f

Note: tampering with, removing or failing to reattach the identification labels or anything else that prevents certain identification of the product will make installation and maintenance operations more difficult.

1.9 Functional diagram

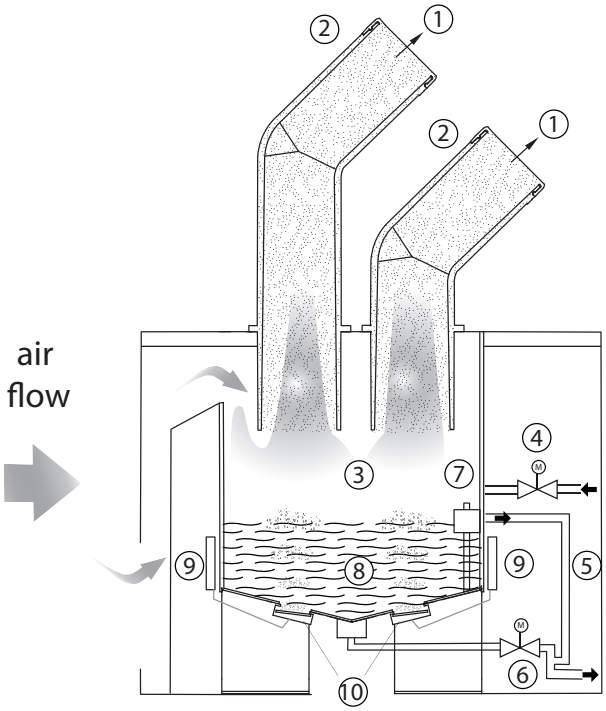

Fig. 1.g

Key

1	Atomized water	7	Float level sensor
2	Diffuser	8	Tank
3	Atomization chamber	9	Driver
4	Fill valve	10	Piezoelectric transducer
5	Overflow pipe	11	Power supply
6	Drain valve		

1.10 Operating principle

The operation of humiSonic humidifiers is based on the principle of atomisation of demineralized water using ultrasound technology. The humidifier operating principle can be summarised as follows:

- water fill via a fill solenoid valve until reaching the required level, measured by the float;
- if the autotest is enabled (default), the drain solenoid valve opens and empties the tank (function designed to clean the tank of any residues/dirt);
- water filled again to the required level;
- start ultrasonic atomisation (the air flow in the duct carries the particles of moisture and distributes them into the surrounding environment);
- water refill based on the float measures that the level has fallen below the recommended value.

Ultrasound technology uses a voltage input signal that is transformed via an oscillating circuit into a high frequency signal (1.7 MHz). This signal supplies a transducer, the top of which is in contact with the water, which starts vibrating at high frequency. The surface of the transducer vibrates at very high speed (1.7 million times a second), a speed that does not allow the water to move, due to its inertial mass. Consequently, a column of water is created above the transducer. During the negative amplitude of the transducer cycle, a void is created that is not filled by the water (as this cannot respond to the extremely fast movements of the transducer). The cavity thus created leads to the production of bubbles that are pushed to the edge of the water column during the positive amplitude of the cycle, thus colliding. During this process, very fine particles of water are atomised on the edge of the water column. The resulting intersecting sound waves created directly underneath the surface of the water cause very small droplets of water to separate, forming a fine mist of vapour that is immediately absorbed by the flow of air.

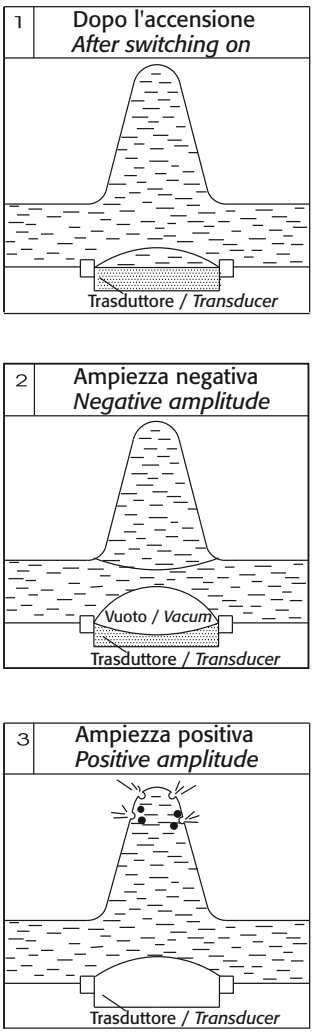

Fig. 1.h

1.11 Accessories

- BMS/RS485 serial card (P/N PCOS004850): to be installed on the control board on the ""Main"" panel, used for direct interface to an RS485 network, with a maximum baud rate of 19200. The board guarantees opto-isolation of the controller from the RS485 serial network.
- Humidity/temperature probes for ducts, CAREL P/Ns DPD*(T/H), DPP*(T/H). Used in ducted heating and air-conditioning systems. Supplied together with a mounting bracket. See manual +030220660.

1.12 Structure

The figure shows the body of the humidifier, once having removed the side panels and the cover (see chap. "Spare parts and maintenance").

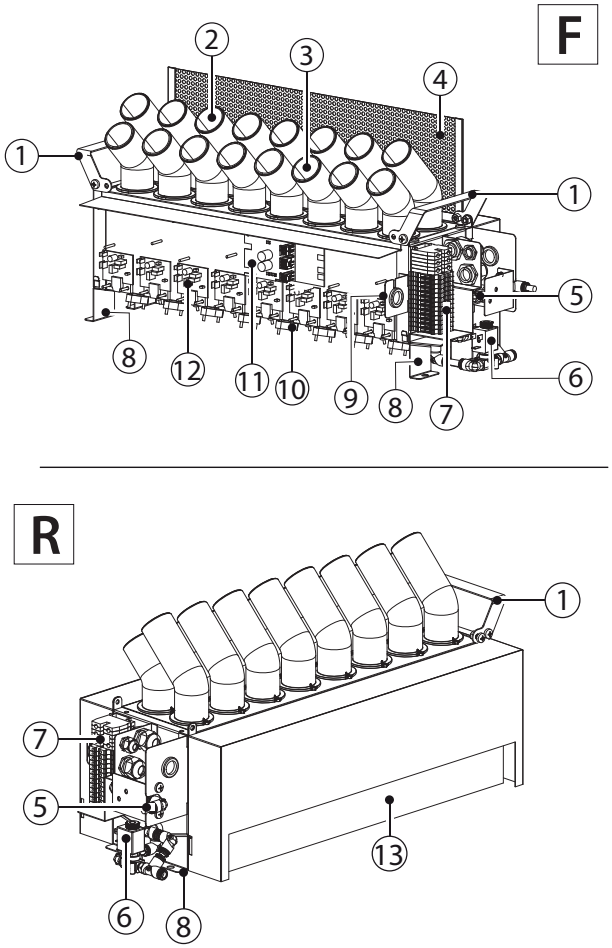

Fig. 1.i

Key

F	Front	7	Terminal block
R	Rear	8	Fastening bracket
1	Lifting handles	9	Bracket with cable glands
2	Rear diffuser	10	Piezoelectric transducer
3	Front diffuser	11	Electronic control board
4	Baffle	12	Driver
5	Fill valve	13	Air intake
6	Drain valve		

2. WATER CONNECTIONS

IMPORTANT: before proceeding with the water connections, make sure that the humidifier is not connected to the mains power supply.

2.1 Warnings

1. Only use demineralised water. Install a shut-off valve for each humidifier. Allowable water pressure: from 1 to 6 bars (from 14.5 to 87 psi);
2. The connections between the pipes/hoses in contact with demineralised water and the humidifier must be made from resistant material suitable for this use (e.g. PVC or stainless steel): nominal pressure ≥ 6 bar (87 psi), working temperature at least 1…40°C (33.8…104°F);
3. The water lines must not be fouled by dust particles or other substances. Carefully clean the lines before connecting to the humidifier;
4. All humiSonic ultrasonic humidifiers are supplied with quick couplings for connecting the fill hose φe/φi = 8/6 mm (OD 5/16", ID 15/64").

NOTICE: for the Australian market and to comply with Watermark requirements, a watermarked approved dual check valve shall be installed in the supply line to the humidifier when connected to potable water. Should on the other hand the humidifier be fed with treated water from a Carel reverse osmosis system connected to potable water, the dual check valve shall be installed in the supply line to the reverse osmosis system.

2.2 Water connections (parts not included)

- Install a manual shut-off valve upstream of the installation (so as to shut off the water supply); the valve must be suitable for use with demineralised water.
- Install a mechanical filter (10 µm) downstream of the manual shut-off valve to trap any solid impurities; the filter must be fitted with shut-off devices to allow cleaning;
- Install a condensate collection basin that is at least 0.6 m longer than the humidifier, made from corrosion-resistant material such as plastic or stainless steel.

Important:

1. when installation is completed, flush the supply hose for around 30 minutes by piping water directly into the drain, without sending it into the humidifier. After installing the valve, flush with water to eliminate any processing residues and oil and prevent that enter the humidifier;
2. the drain hose must have a internal minimum diameter of 6 mm (15/64"); it must not have any bends that block water flow; the drain line must comply with national and local standards in force and must include a funnel to ensure interruption of continuity and a drain trap to prevent the return of bad odours. The end of the line must have a downwards slope to assist drainage;
3. do not block the atomised water outlet or the intake air openings;
4. always check for water leaks. If the humidifier is sprayed with water during operation, short circuits may occur;
5. if there is the risk of the feedwater freezing, or using heating cables on water pipes.

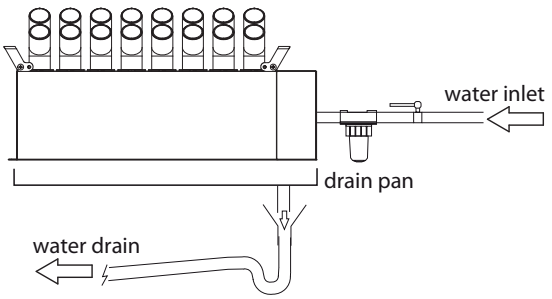

Fig. 2.a

2.3 Positioning

As seen in chap.1, the humidifier must be installed in ducting where the air velocity is between 1.5 and 3 m/s (295…590 fpm).

Note: when calculating air velocity in the duct, keep in mind that the area occupied by the humidifier needs to be subtracted from the cross-section of the duct.

The recommended position is downstream of the heating coil.

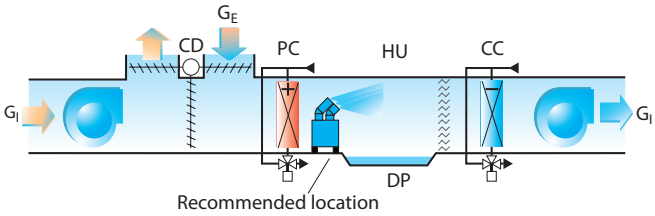

Fig. 2.b

Key

G_I	Total air flow-rate introduced	HU	Humidifier
CD	Combined dampers	DP	Condensate collection tank
G_E	Outside air flow-rate	CC	Cooling coil
PC	Heating coil		

Fit the humidifier on a support that guarantees its rise from the bottom of the duct by at least 50 mm (2 in).

If assembling multiple humidifiers, arrange them in a structure that can support the weight of the appliances and that leaves optimum space between the units, so as to ensure efficient operation. Install a manual shut-off valve for each humidifier.

Note: any obstacles downstream of the humidifier are places where water may condense.

2.4 Water connections

Once the humidifier has been fitted, make the water connections as follows:

1. Unscrew the screws (A) and remove the right side cover (B);

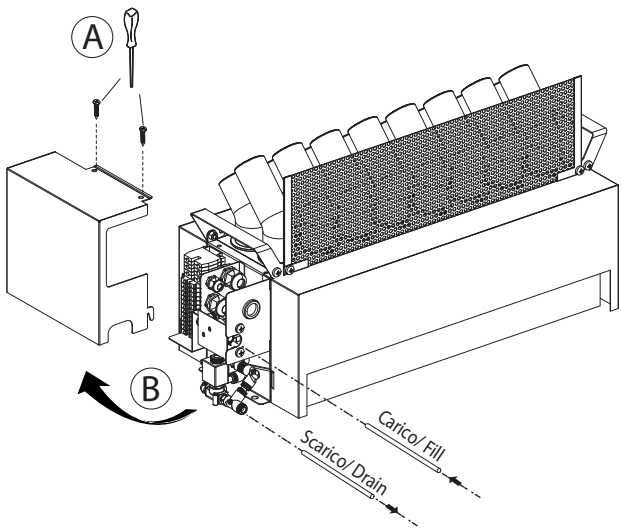

Fig. 2.c

2. Attach the pipes to the quick couplings (C) to connect the fill/drain valves;

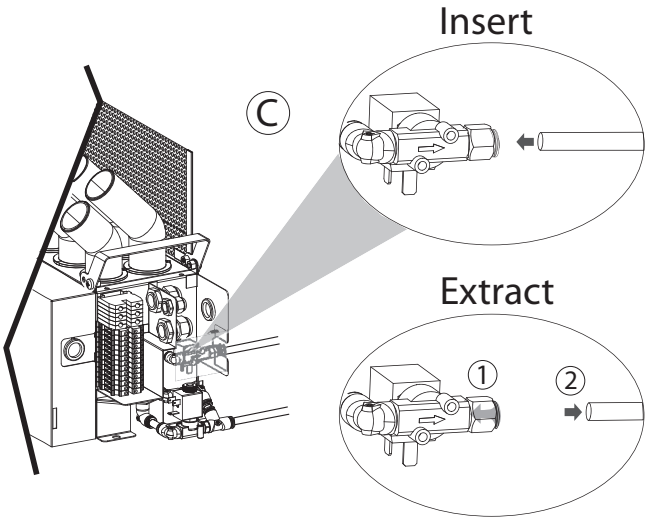

Fig. 2.d

Note: OD = 8 mm (5/16"), ID = 6 mm (15/64")

3. Reposition the cover, paying attention to the point of attachment (D).

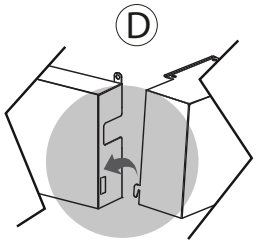

Fig. 2.e

2.5 Feedwater

To ensure correct operation, humiSonic requires the use of demineralised water, with the chemical and physical characteristics specified in the table. To ensure these water quality values, a reverse-osmosis demineralisation system is typically used.

FEEDWATER

Quick coupling	OD 8 mm (OD 5/16")
Temperature limits °C (°F)	1…40 (33.8 to 104)
Pressure limits bar (psi)	1…6 (14.5…87)
Specific conductivity at 20°C	<80 µS/cm
Total hardness	0…25 mg/l $CaCO_3$
Temporary hardness	0…15 mg/l $CaCO_3$
Total quantity of dissolved solids (cR)	Depending on specific conductivity(1)
Dry residue at 180°C	Depending on specific conductivity(1)
Iron + manganese	0 mg/l Fe+Mn
Chlorides	0 to 10 ppm Cl
Silicon dioxide	0 to 1 mg/l SiO2
Chlorine ions	0 mg/l Cl
Calcium sulphate	mg/l CaSO4
Instant flow-rate l/min (gpm)	0.6 (0.16)

Tab. 2.a

(1) = in general $C_R = 0{,}65 * \sigma_{R,20\,°C}$; $R_{180} = 0{,}93 * \sigma_{R,20\,°C}$

To avoid excessive oversizing of the reverse osmosis system, it is recommended to avoid sizing the system based on instant flow-rate. Rather, an expansion vessel should be installed between the water treatment system and humiSonic.

The sizing calculations need to consider discontinuous water consumption, comprising the following stages:
- filling (fill valve open);
- production (fill valve closed);
- washing (fill valve open).The table below suggests the minimum sizes for connection to a generic reverse osmosis system.

Model	Storage l (gal)	Total expansion l (gal) vessel volume (pre-charge 1.5 bars/22 psi)	Reverse osmosis system l/h (gph)
UU02	2,8 (0.62)	11,2 (2.46)	5,2 (1.37)
UU05	3,6 (0.79)	14,4 (3.17)	8,4 (2.22)
UU07	4,4 (0.97)	17,6 (3.87)	11,6 (3.06)
UU09	5,2 (1.14)	20,8 (4.56)	14,8 (3.91)
UU14	6,8 (1.50)	27,2 (5.98)	20,8 (5.49)
UU18	8,0 (1.76)	32,0 (7.04)	26,0 (6.89)

Tab. 2.b

If no storage vessel is available, the reverse osmosis system must guarantee the instant flow-rate of the fill SV, equal to 0.6 l/min (0.16 gpm).

Connecting humiSonic to the Carel WTS Compact (only for not American market)

The Carel product range includes a series of reverse osmosis systems ("WTS Compact") designed to produce water according to the feedwater specifications and optimise connection to and operation with humiSonic (see manuals +0300017 and +0300019).

All WTS Compact systems (P/N ROC%) always come with an expansion vessel that maintains the required pressure in the circuit downstream. Operation of the system is managed by pressure switches in the outlet circuit. The basic rule for connection to the humidifier is that the water contained in the expansion vessel must be sufficient to satisfy initial filling and, if necessary, the washing cycle, while the WTS production time must cover humiSonic production demand and fill the vessel as quickly as possible.

The table below suggests the water consumption values and connections for all sizes of humidifiers.

Model	Prod. l/h (gph)	Tank capac. l (gal)	Wash (*) l/h (gph)	Code WTS (only for not American market))	Additional vessel
UU02	2,4 (0.63)	0,8 (0.18)	2,8 (0.74)	ROC025500N	Not required
UU05	4,8 (1.27)	1,6 (0.35)	3,6 (0.95)	ROC025500N	Not required
UU07	7,2 (1.90)	2,4 (0.53)	4,4 (1.16)	ROC025500N	Not required
UU09	9,6 (2.53)	3,2 (0.70)	5,2 (1.37)	ROC025500N	Not required
UU14	14,4 (3.80)	4,8 (1.06)	6,8 (1.80)	ROC025500N	ROKC00KTVE
UU18	18 (4.76)	6,0 (1.32)	8,0 (2.11)	ROC025500N	ROKC00KTVE

Tab. 2.c

(*) Water consumption during the washing cycle is calculated based on the default settings (1 wash every 12 hours, lasting 1 minute, which ends by totalling filling and emptying the volume of the tank). Consumption depends on the fill solenoid valve flow-rate, which is 0.6 l/min (0.16 gpm). The duration and frequency of the washing cycles are parameters that can be set by the user, and these have a significant impact on the sizing of the WTS system.

Important:
1. do not add disinfectants or anticorrosive compounds to the water, as these are potential irritants;
2. the use of well water, industrial water or water from cooling circuits and, in general, any potentially chemically or bacteriologically contaminated water is prohibited.

2.6 Drain water

This is not toxic and can be drained into the sewerage system, as defined by directive 91/271/EEC on urban waste-water treatment.

DRAIN WATER

Quick coupling	OD Ø 8 mm (OD 5/16")
Typical temperature °C (°F)	1 to 40 (33.8 to 104)

Tab. 2.d

3. ELECTRICAL CONNECTIONS

3.1 Humidifier electrical connections

Important:
- before proceeding with the electrical connections, ensure that the control panel – humidifier system is disconnected from the mains power supply;
- make sure that the power supply voltage of the control panel corresponds to the value indicated in the rated data.

To power up the humidifier, connect the cables running from the electrical panel:
1. +48 Vdc/ -48 Vdc from the power supply;
2. +24 Vac/ -24 Vac from the transformer;
3. the power cable for the lights ("Secondary" electrical panel only);
4. the cable for the signal lights ("Secondary" electrical panel) or RS485 serial line ("Main" electrical panel).

After having removed the screws (A), remove the side cover (B) and run the cables through the cable glands on the case and inside the unit (C). Then make the electrical connections (D) and reposition the cover, repeating the same operations in reverse.

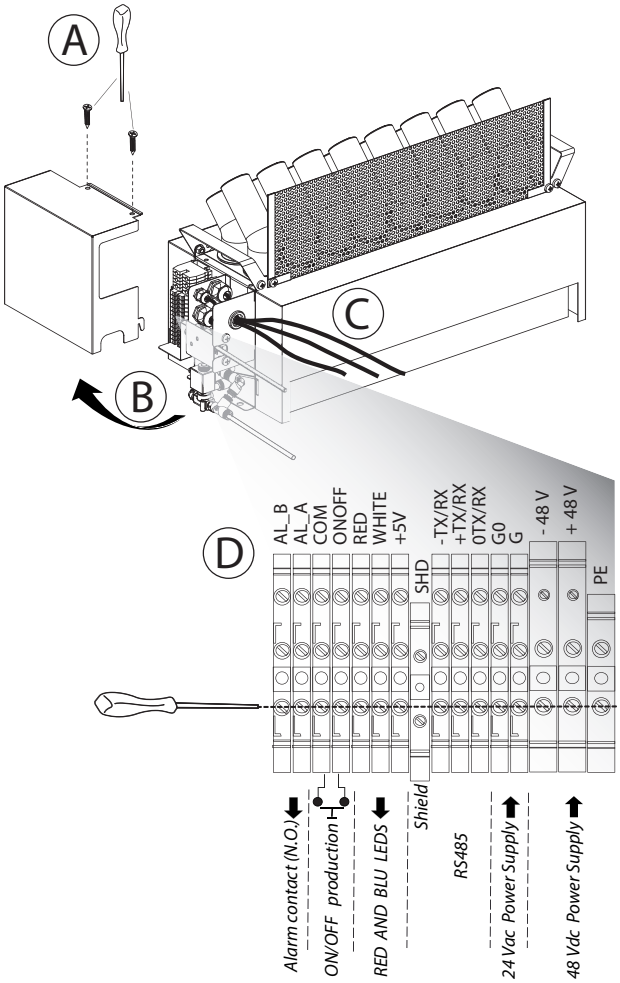

Fig. 3.a

Note: to avoid unwanted interference, power cables should be kept separate from probe signal cables.

DIPSWITCH CONFIGURATION

The dipswitches are located on the humidifier control board. These must be set before starting the humidifier.

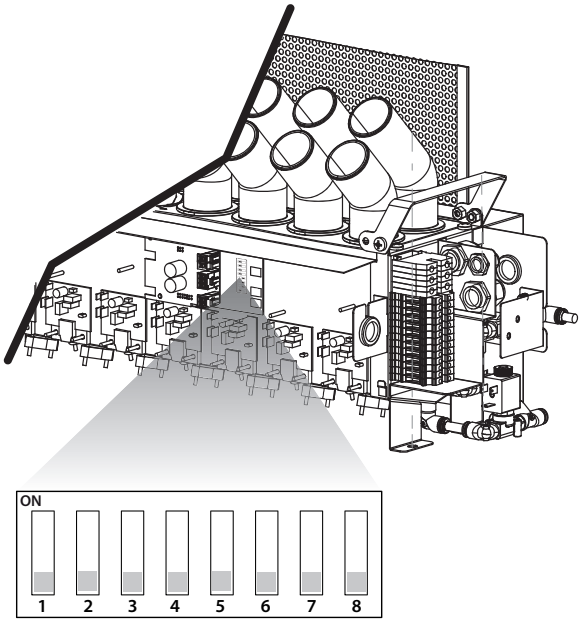

Fig. 3.b

Key

1	Communication OFF: Carel/Modbus Serial 485 ON: Reserved
2-3	Reserved
4	Serial 485 / tLAN baud rate
	OFF: 19200
	ON: 9600
5-6	Reserved
7	Reserved
8	Transducer production management
	OFF: --> parallel
	ON: --> series

3.2 Functional wiring diagram

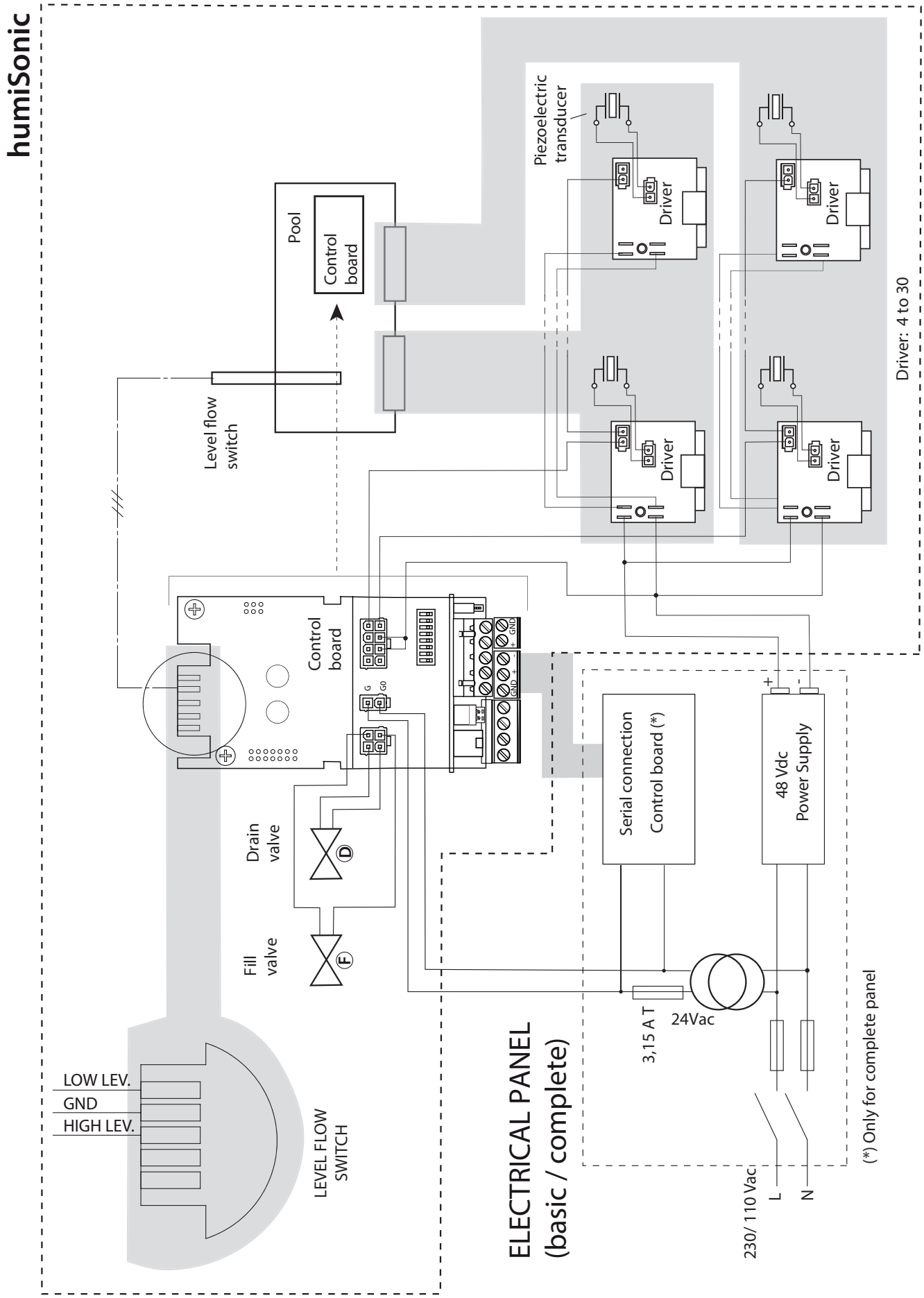

Fig. 3.c

3.3 "Secondary" electrical panel

STRUCTURE

OUTSIDE

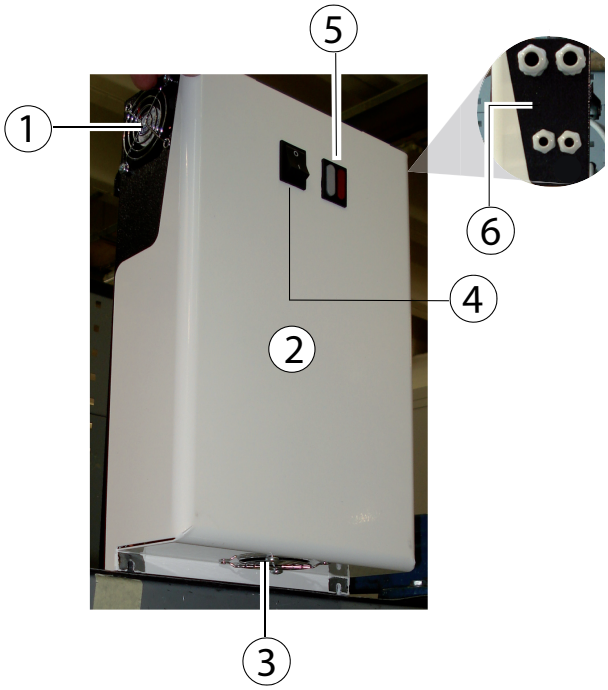

Fig. 3.d

INSIDE

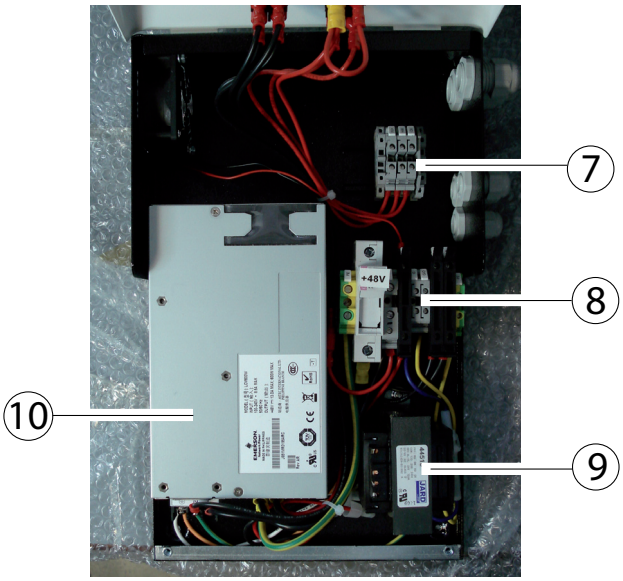

Fig. 3.e

Key

1	Exhaust air fan			6	Cable glands
2	Cover			7	Light terminal block
3	Air intake			8	Main terminal block
4	ON/OFF switch			9	Transformer
5	LED	BLUE	power	10	Power supply
		RED	alarm		

DIMENSIONS - mm (in)

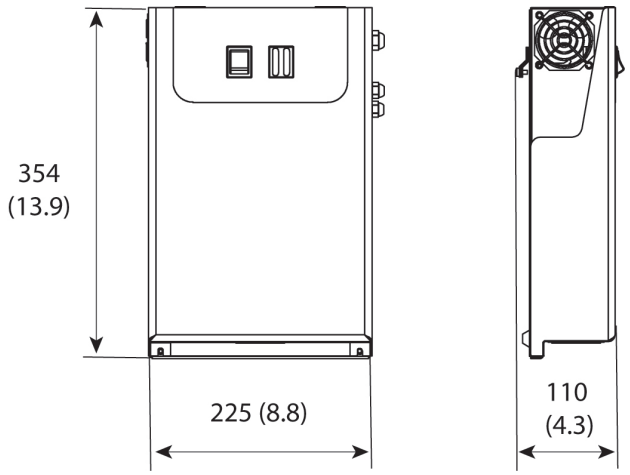

Fig. 3.f

Note: for UQ18B% dimensions, refer to the quotes indicated in 3.5 section concerning "Main" control panel.

POSITIONING

The electrical panel is designed for wall-mounting and features forced ventilation for cooling. See the figure for the minimum clearances in mm (in) that ensure sufficient air flow and change inside the electrical panel.

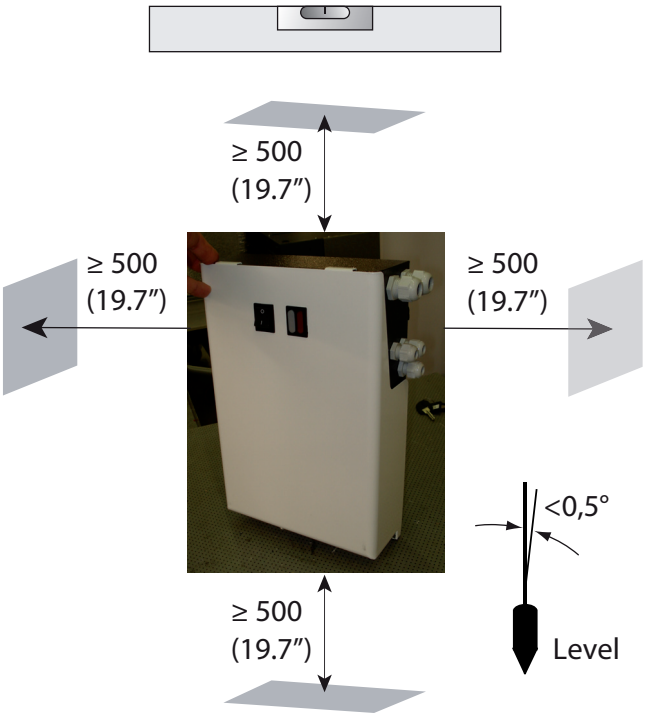

Fig. 3.g

Weight

UQ05B10000	Secondary electrical panel 300 W -110 V	6,5 Kg /14,3 lbs
UQ05BD0000	Secondary electrical panel 300 W -230 V	7 Kg / 15,4 lbs
UQ09B10000	Secondary electrical panel 600 W -110 V	9 Kg / 19,8
UQ09BD0000	Secondary electrical panel 600 W -230 V	7 Kg / 15,4 lbs
UQ18B10000	Secondary electrical panel 1200 W -110 V	11,9 Kg / 26,2 lbs
UQ18BD0000	Secondary electrical panel 1200 W -230 V	11,9 Kg / 26,2 lbs

3.4 "Secondary" panel wiring diagram

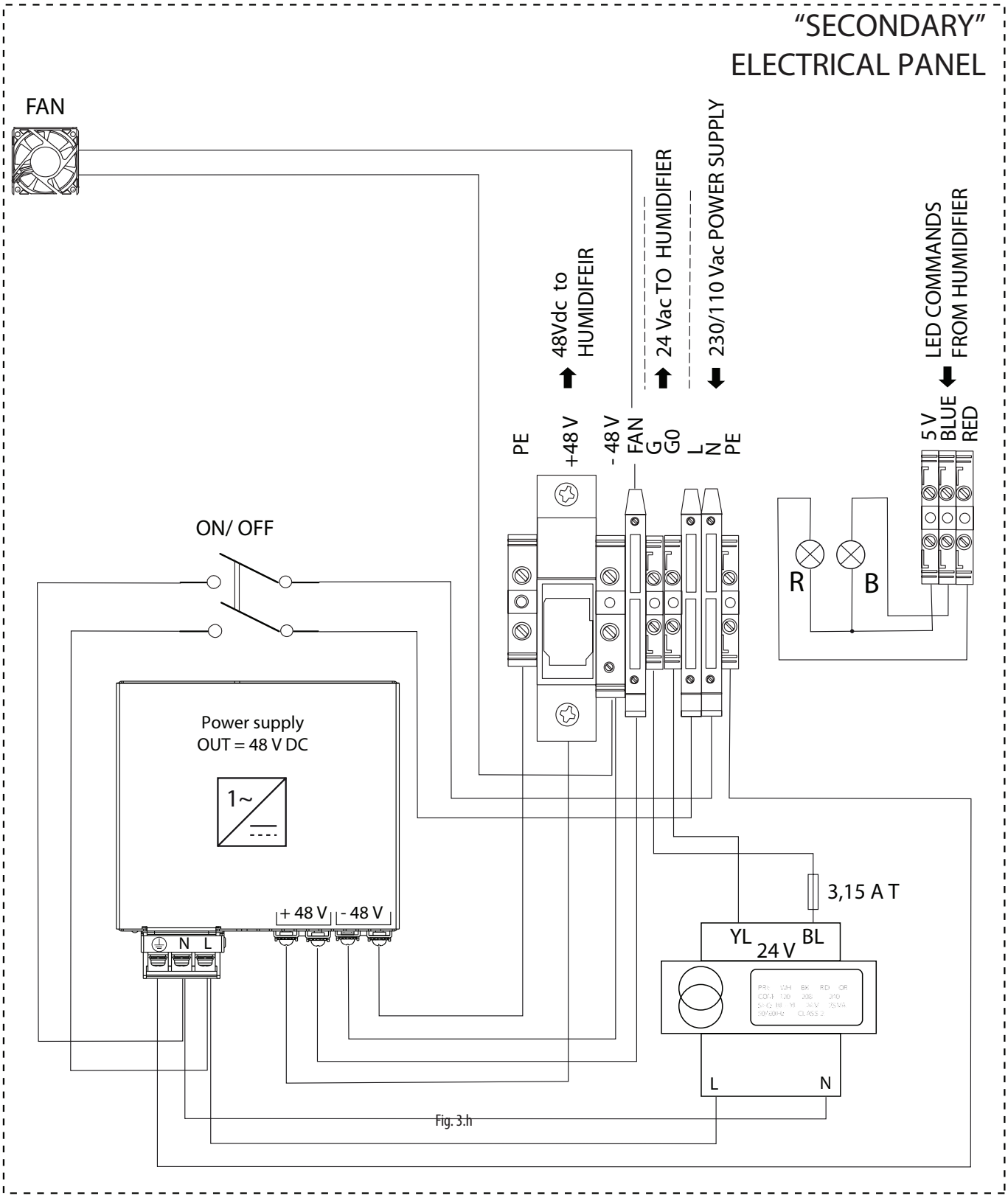

Fig. 3.h

3.5 "Main" electrical panel

STRUCTURE

OUTSIDE

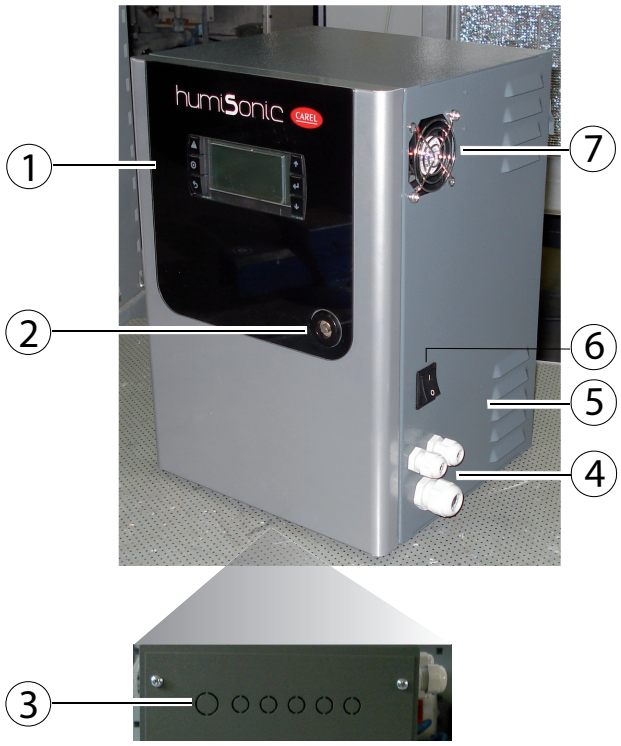

Fig. 3.i

INSIDE

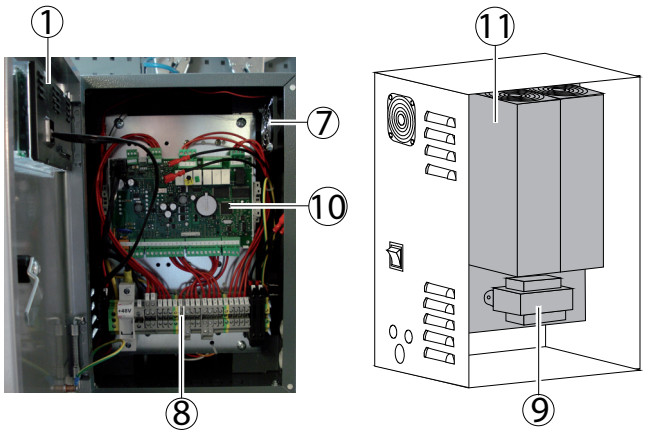

Fig. 3.j

Key

1	Terminal	7	Exhaust air fan
2	Cover with lock	8	Terminal block
3	Knock-outs for additional cable glands (installer's responsibility)	9	Transformer
4	Cable glands	10	Control board
5	Air intake openings	11	Power supply
6	ON/OFF switch		

DIMENSIONS - mm (in)

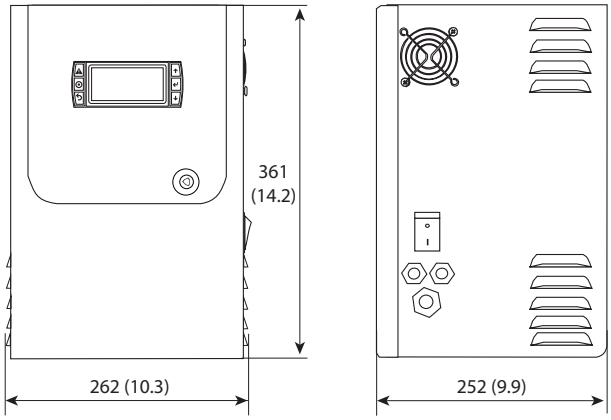

Fig. 3.k

POSITIONING

The electrical panel is designed for wall-mounting and features forced ventilation for cooling. See the figure for the minimum clearances in mm (in) that ensure sufficient air flow and change inside the electrical panel.

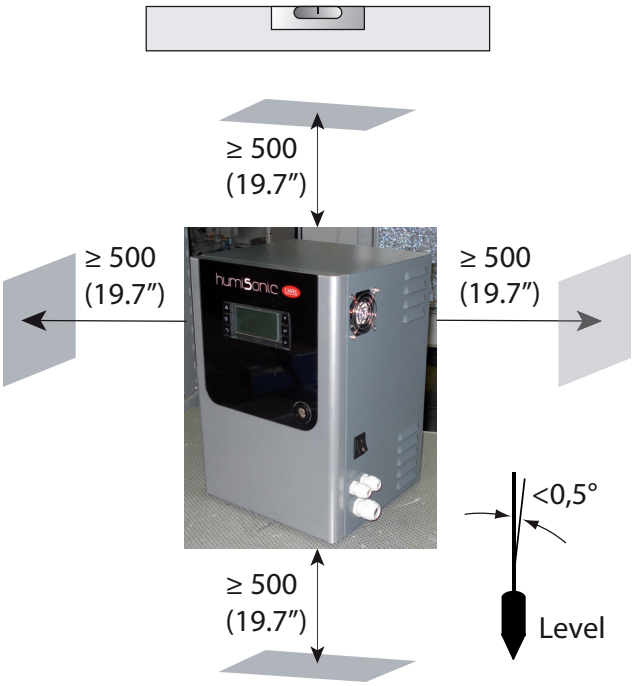

Fig. 3.l

Weight

UQ05C10000	Main Electrical Panel 300 W -110 V	9,5 Kg / 20,9 lbs
UQ05CD0000	Main Electrical Panel 300 W -230 V	9,5 Kg / 20,9 lbs
UQ09C10000	Main Electrical Panel 600 W -110 V	9 Kg / 19,8 lbs
UQ09CD0000	Main Electrical Panel 600 W -230 V	10 Kg / 22 lbs
UQ18C10000	Main Electrical Panel 1200 W -110 V	11,5 Kg / 25,4 lbs
UQ18CD0000	Main Electrical Panel 1200 W -230 V	11,5 Kg / 25,4 lbs

3.6 “Main” panel wiring diagram

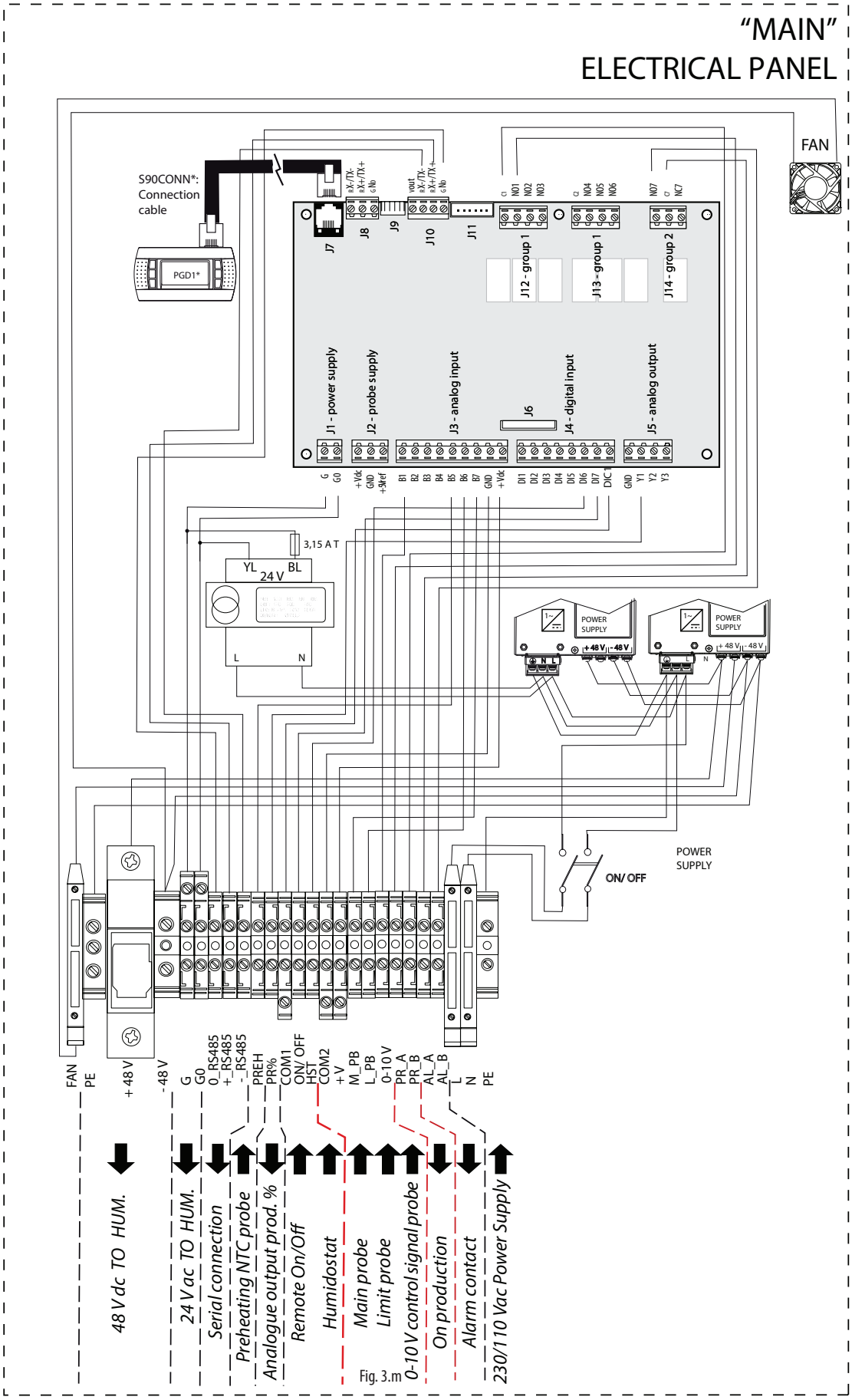

Fig. 3.m

3.7 Electrical connections to the "Secondary" panel

Below is the connection diagram between the terminal block on the "Secondary" electrical panel and the terminal block on the humidifier.

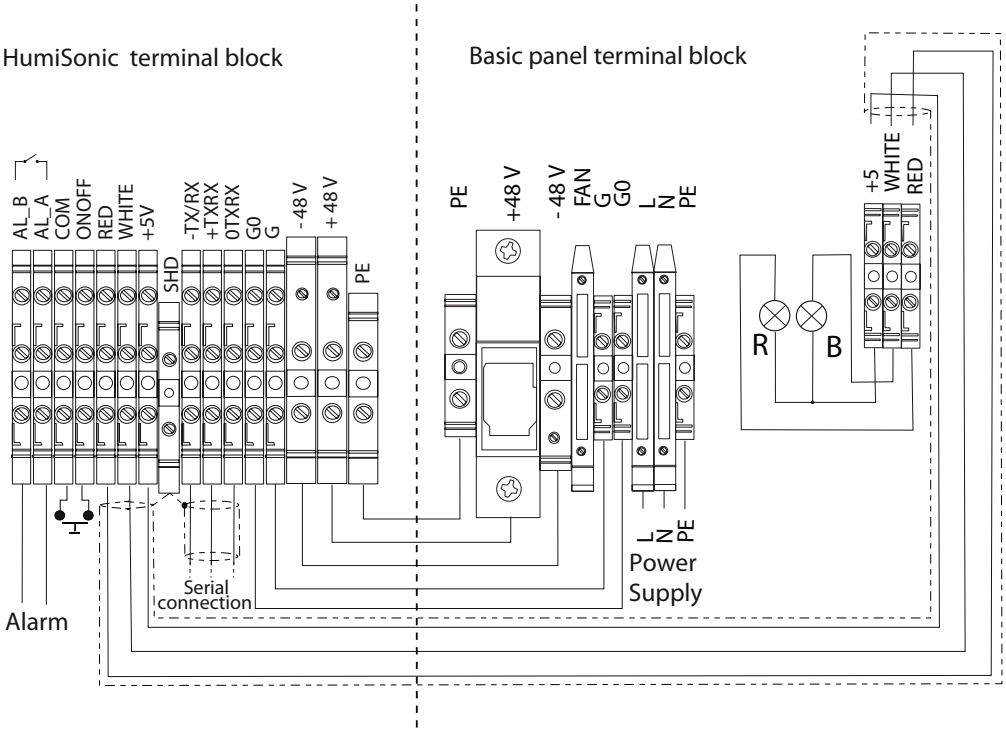

Fig. 3.n

HUMIDISTAT OR REMOTE CONTACT (ON/OFF action)
Production is enabled by closing the ONOFF – COM contact on the terminal block. This can be connected to a switch, a humidistat or a controller (voltage-free contact, max 5 Vdc open, max 7 mA closed).

RS485 SERIAL CONNECTION
CAREL/ Modbus protocol: -TXRX-, +TXRX, 0TXRX terminals.

Important: for RS485 connections in household (IEC EN 55014-1) and residential (IEC EN 61000-6-3) environments, use shielded cable (with shield connected to PE both on the terminal and controller ends), maximum length specified by the EIA RS485 protocol, equivalent to European standard CCITT V11, using AWG26 twisted pair cable; the input impedance of the 485 stage is 1/8 unit-load (96 kOhm). This configuration allows a maximum of 256 devices to be connected, with cables in separate conduits from the power cable.

ALARM RELAY
Terminals: AL_B, AL_A
Ready for remote signalling of one or more alarms.

Note: in industrial environments (IEC EN61000-6-2) the signal cables leaving the unit must not exceed 10 m (33 ft) in length: remote on/off digital input (ON/OFF - COM terminals) and shielded cable for RS485 communication.

3.8 Connection cable sizing

The table below shows the sizing of the 48 Vdc connection cable between the humidifier and the "Secondary" or "Main" electrical panel. The minimum cross-section depends on the length. Use cable for working voltages ≥ 300 Vac and operating temperatures ≥ 90°C.

P/N	Current (A)	L=5 m	L=10 m
		AWG (mm²)	
UU02D%	3.2	14(2.5)	14(2.5)
UU05D%	6.4	14(2.5)	14(2.5)
UU07D%	9.6	14(2.5)	13(4)
UU09D%	12.8	14(2.5)	13(4)
UU14D%	19.2	10(6)	10(6)
UU18D%	24	10(6)	9(10)

Tab. 3.a

24 Vac connection: two-wire cable, type AWG 16 (1.32 mm²).

Light connection ("Secondary" panel only): three-wire shielded cable, type AWG 22 (0.33 mm²).

3.9 Electrical connect. to the "Main" panel

Below is the connection diagram between the terminal block on the "Main" electrical panel and the terminal block on the humidifier.

Depending on the type of signal, atomised water production can be enabled and/or managed in different ways.

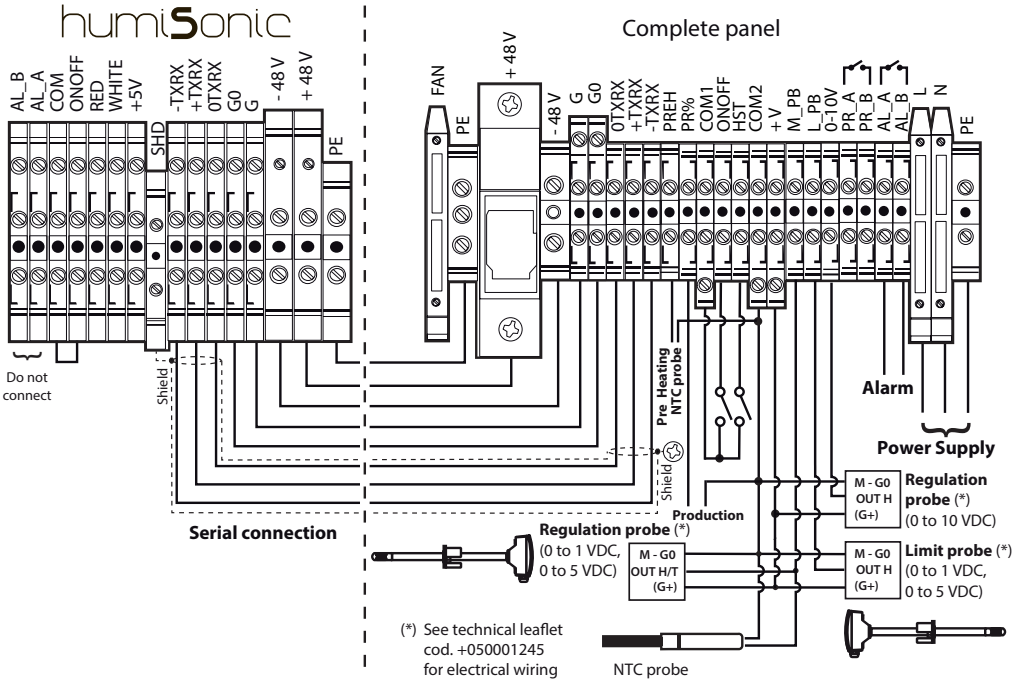

Fig. 3.0

3.10 Control types

To enable all types of control:

1. Humidifier terminal block: keep the factory-set jumper on terminals COM1 and ONOFF;
2. Terminal block on the "Main" electrical panel: Jumper terminals ONOFF and COM1 (enable)

ON/OFF CONTROL (humidistat or remote contact):

"Main" electrical panel terminal block

- Connect terminals HST and COM1 to a humidistat or remote contact (voltage-free contact);
- Set Fa01: Regulation type = On/Off.

EXTERNAL PROPORTIONAL CONTROLLER (modulating action):

"Main" electrical panel terminal block

- Connect the COM2 and 0-10V terminals to a 0-10V external controller, or the COM2 and M_PB (main probe) terminals to a 0-1V / 0-5V external controller
- Set Fa01: Ext. regulator;
- Set parameter Fa04 for the type of signal from the external controller: Probe type = 0 to 1V, 0 to 5V / 0 to 10V.

EXTERNAL PROPORTIONAL CONTROLLER (mod. action) + limit rH%:

"Main" electrical panel terminal block

- Connect the COM2 and 0-10V terminals to a 0-10V external controller, or the COM2 and M_PB (main probe) terminals to a 0-1V / 0-5V external controller
- Connect the COM2, +V and L_PB (limit probe) terminals to a 0-1V / 0-5V active humidity probe;
- Set Fa01: Ext. regulator + limit rH%;
- Set parameter Fa04 for the type of signal from the external controller: Probe type = 0 to 1V, 0 to 5V / 0 to 10V;
- Set parameter Fa06 for the type of signal from the limit probe: Probe type = 0 to 1V, 0 to 5V.

TEMPERATURE CONTROL

"Main" electrical panel terminal block

- Connect the COM2, +V and 0-10V terminals to a 0-10V temperature probe; or the COM2, +V and M_PB (main probe) terminals to a 0-1V / 0-5V / 0-10V temperature probe; or the COM2 and M_PB terminals only to an NTC probe;
- Set Fa01: T probe;
- Set parameter Fa04 for the type of signal from the temperature probe: Probe type = 0 to 1V, 0 to 5V, 0 to 10V, NTC.

Note: if using the NTC probe, remove the sheathed resistor placed between terminals B7-GND on the electronic board

TEMPERATURE CONTROL + limit rH%

"Main" electrical panel terminal block

- Connect the COM2, +V and 0-10V terminals to a 0-10V temperature probe; or the COM2, +V and M_PB (main probe) terminals to a 0-1V / 0-5V temperature probe; or the COM and M_PB terminals only to an NTC probe;
- Connect the COM2, +V and L_PB (limit probe) terminals to a 0-1V / 0-5V humidity probe;
- Set Fa01: T probe +limit rH%;
- Set parameter Fa04 for the type of signal from the temperature probe: Probe type = 0 to 1V, 0 to 5V, 0 to 10V, NTC.
- Set parameter Fa06 for the type of signal from the limit probe: Probe type = 0 to 1V, 0 to 5V.

Note: : if using the NTC probe, remove the sheathed resistor placed between terminals B7-GND on the electronic board

HUMIDITY CONTROL

"Main" electrical panel terminal block

- Connect the COM2, +V and 0-10V terminals to a 0-10V humidity probe; or the COM2, +V and M_PB (main probe) terminals to a 0-1V / 0-5V temperature probe;
- Set Fa01: probe rH%;
- Set parameter Fa04 for the type of signal from the humidity probe: Probe type = 0 to 1V, 0 to 5V / 0 to 10V.

HUMIDITY CONTROL + Limit %rH

"Main" electrical panel terminal block

- Connect the COM2, +V and 0-10V terminals to a 0-10V humidity probe; or the COM2, +V and M_PB (main probe) terminals to a 0-1V / 0-5V / 0-10V temperature probe;
- Connect the COM2, +V and 0-10V terminals (limit probe) to a 0-1V / 0-5V humidity probe;
- Set Fa01: probe rH% + limit rH%;
- Set parameter Fa04 for the type of signal from the humidity probe: Probe type = 0 to 1V, 0 to 5V;
- Set parameter Fa06 for the type of signal from the limit probe: Probe type = 0 to 1V, 0 to 5V.

PRE-HEATING NTC PROBE OPTION: "Main" electrical panel terminal board
- It allows modulation of the nebulized flow rate if the preheating upstream of the humidifier in the air handling unit is lower than the design conditions.
- Connect the NTC probe to the PREH and COM2 terminals
- Enable the probe to the Fa12 mask

FINAL CHECKS
The following conditions represent correct electrical connection:
- mains power to the humidifier corresponds to the rated voltage;
- a mains disconnect switch has been installed so as to be able to disconnect power to the humidifier;
- terminals COM – ONOFF on the humidifier terminal block are jumpered or connected to a contact to enable operation;
- if the humidifier is controlled by an external controller, the signal earth is electrically connected to the controller earth.

4. STARTING AND USER INTERFACE ("SECONDARY" PANEL)

Before starting the humidifier check:
- water connections: in the event of water leaks, do not start the humidifier before having restored the connections;
- electrical connections between the humidifier and the control panel.

4.1 Starting

See chap. "Electrical connections"
1. The humidifier, once powered and enabled for production (remote on-off/humidistat), is ready for operation.
2. Operation will only stop if the enabling signal is no longer present.

4.2 Shutdown / Standby

1. To switch the humidifier off, press the ON/OFF button.
2. The humidifier goes into standby when:
   - the remote on/off contact is open;
   - the on/off contact is open and serial enabling is set to 1 (see chapter "Humidifier control via network").

When the humidifier is in standby, the tank is emptied automatically

4.3 Autotest

When the humidifier is first started (from off), if enabled and humidity production is required, a test cycle is run. A complete fill and drain cycle is performed, during which the level sensor is monitored; if the test is successful, regular atomised water production will start. If the test fails, production is disabled (see the alarm table).

4.4 Signal lights on the "Secondary" panel

	Blue light
Steady	Humidity production
Slow flash*	Standby
Fast flash**	Autotest or wash

* Slow flash: 1 s ON and 1 s OFF
** Fast flash: 0.2 s ON and 0.2 s OFF

The red LED means an alarm is active. See the chapter on Alarms for the alarm table.

4.5 Disabling

The humidifier can be disabled in three different ways:
- Opening the COM-ONOFF contact (enabling signal);
- Active alarms;
- Via network.

4.6 Reset tank hour counter

The humidifier is fitted with an hour counter that records operation. After a set number of hours (5,000), a signal is activated to indicate maintenance should be performed on the tank and operation of the piezoelectric elements checked (see the chapter on Maintenance). To reset the hour counter at any time, proceed as follows:
- switch the humidifier off;
- close the water supply tap and wait for the tank to empty completely;
- remove the front panel from the humidifier to access the control board;
- unplug the Lumberg connector on the control board;
- open the On/Off contact;
- switch the humidifier on (with the Lumberg connector disconnected from the control board). Both lights will flash;
- close the On/Off contact. The yellow LED will remain on steady;
- switch the humidifier off;
- plug the Lumberg connector (A) onto the board, making sure it is inserted in the correct direction;
- switch the humidifier on.

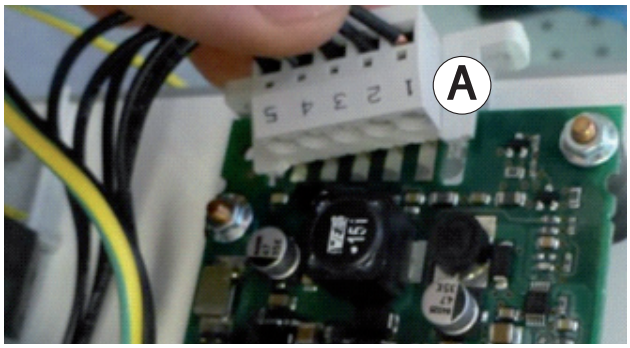

Fig. 4.a

4.7 Automatic washing

The humidifier performs an automatic washing cycle periodically (default every 60 minutes), during which the production of sprayed water is interrupted. The washing cycle involves a complete drain cycle, a phase in which fill and drain are activated together (default 1 minute) to flush out any residues in the tank, a complete fill cycle and finally another complete drain cycle. During this operation, atomised water production is stopped.

4.8 Washing due to inactivity

If the humidifier remains inactive (on but in standby) for an extended period (24 hours) a washing cycle is performed, as described in the previous paragraph. This cleans the tank of any residues (e.g. dust) that may have accumulated during the period of inactivity. The washing cycle is run after default 24 hours (continuous) of no operation, i.e. the humidifier is in standby.

5. USER INTERFACE ("MAIN" PANEL)

5.1 Graphic terminal

The built-in terminal on the "Main" electrical panel comprises the display and the keypad, featuring 6 buttons, which are used to perform all the configuration and programming operations on humiSonic.

5.2 Keypad

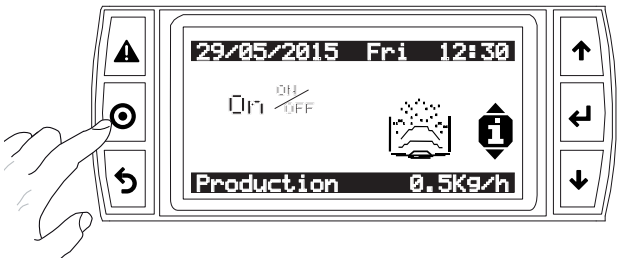

Fig. 5.a

BUTTON	DESCRIPTION
Alarm	• Display the list of active alarms • Reset alarms with manual reset
Prg	Access to the main menu
Esc	Return to the previous screen
↑ / ↓ Up / Down	• Scroll between screens • Increase / decrease the value
Enter	• Switch from display mode to setting mode • Confirm the value and move to the next parameter

Tab. 5.a

5.3 Display

During normal operation, the display shows, as well as the current date and time, the type of control selected, the reading of the control probe and limit probe (if featured), and the quantity of atomised water produced.

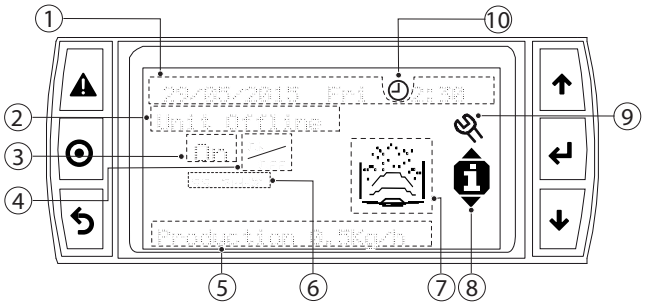

Fig. 5.b

Key

1	Current date/time	6	Limit humidity probe reading
2	Cause of unit shutdown/Unit status	7	Unit status icon/active actuators
3	Request	8	Quick access button menu icon
4	Control type selected	9	Maintenance required
5	Unit status	10	Time bands enabled

CAUSE OF UNIT SHUTDOWN

Message	Description
Off by Key	Off from keypad
Unit Offline	Unit offline
Remote On/Off	Remote On/Off
No request	No request
Unit disabled	Unit disabled
Alarms	Alarms
Manual mode	Manual mode
Off from BMS	Off from BMS
Off from Sched.	Off from Sched.

Tab. 5.a

UNIT STATUS

Message	Description
Production …Kg/h/(lb/h)	Instant production in kg/h (lb/h)
Drain	Drain
Init	Initialisation
Fill	Filling
Autotest	Autotest
Waiting (.. min)	Waiting (.. min) to restart
Disabled	Disabled

Tab. 5.b

Request	Meaning	Control type
On/--	On= request --- = no request	On/Off
0 to 100 %	Request percentage	% → Ext. regulator
rH%:	Control probe reading in rH%	rH% probe
°C	Control probe reading in °C	T probe

Tab. 5.c

Unit status/ active actuators	Meaning
	Production in progress
	Fill in progress
	Drain open
	Water present
	Stop transducer control
	Malfunction

Tab. 5.d

Note: the control type is selectable in user menu F, under screen Fa01: Regulation. See the parameter table.

5.4 Programming mode

The parameters can be modified using the front keypad. Access differs according to the level: User (accessible without password), Service (password=PW1) and Manufacturer (password = PW2). Press Prg to access the main menu.

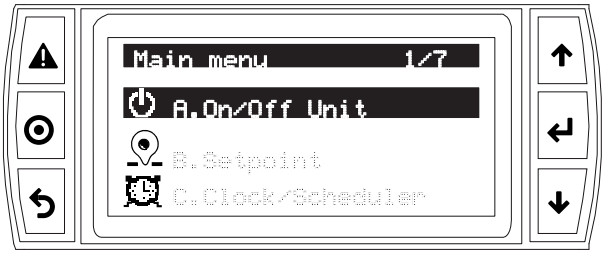

Fig. 5.c

Main menu icons

A.		Unit On/Off	E.		Alarm log
B.		Set point	F.		User
C.		Clock/scheduler	G.		Service
D.		Main/ Secondary (future uses)			

Tab. 5.e

5.5 Setting/displaying the user parameters

The user parameters (A…F) are all the parameters accessible without password, and include the following categories:
A: Unit ON/OFF: enable power-on from keypad, enable Autotest and manual washing, set maximum production.
B: Set point: if Fa01 is set to control with probe (+ limit humidity probe), the screen will show the humidity/temperature set point (+limit humidity set point);
C: Clock/scheduler: set the current time and date (C01), the date for changeover from standard time to daylight saving time and vice-versa (C02), the daily time bands (C03) with weekly programming: up to 3 daily time bands can be set with independent set points. See example 2 described below.
D: Main-Secondary network configuration: Reserved.
E: Alarm log: the alarm log contains all the alarms, both active (↓) and already reset (↑). The display can include up to 50 alarms with progressive numbering, time and date of activation.
F: User: select the type of control and related parameters, enable washing and activation mode, general settings for restart times, alarm relay logic, drain valve in standby. See the chapter on "Functions".

EXAMPLE 1: Setting the current time/date.

1. press Esc one or more times to move to the standard display;
2. press Prg: the display shows the main menu;
3. press UP/DOWN to move to category C. Clock/scheduler;
4. press Enter to display the first screen: C01;
5. press Enter to modify the current time using UP/DOWN; confirm by pressing Enter and set the month and year;
6. confirm by pressing Enter and set the hour/minutes;
7. at the end of the settings, press Esc twice to exit the parameter setting procedure.

EXAMPLE 2: Setting the time bands and copying from one day to another.

- press Esc one or more times to move to the standard display;
- press Prg: the display shows the main menu;
- press UP/DOWN to move to category C. Clock/scheduler and Enter again until reaching screen C03;
- press Enter and enable the time bands (No → Yes); then go to screen C04;
- in screen C04:
  a. press Enter and UP/DOWN to show the check sign for time band 1;
  b. press Enter and UP/DOWN to select the day of the week. Confirm by pressing Enter. Press UP/Down to uncheck the box. Press Enter to set the band start hours and minutes and the status: OFF, ON, ON+SET (ON+SET if control with probe selected). If ON, the set point selected in screen B is shown, if ON+Set, set the desired set point;
  c. once the time bands have been set for the day in question, press PRG to copy the settings from one day to another.

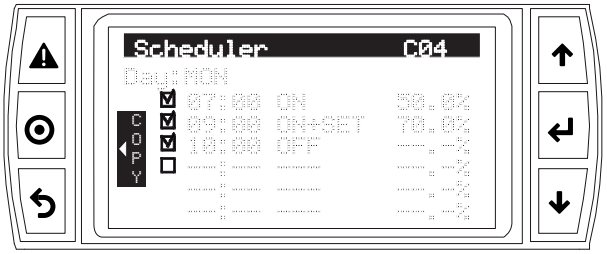

Fig. 5.d

5.6 Setting the Service parameters

The Service parameters (letter G) concern:
a: change language;
b: information on: application, BIOS and BOOT version; flash memory and RAM on the control board;
c: hour counter: operating hours in production and total unit operating hours; maintenance interval setting.
To access the screens from d) on, the service password is needed - PW1(0077).
d: BMS configuration: set BMS communication protocol (CAREL, Modbus), communication speed, network address, enable control serial.
e:

- Timings (Gea): set fill/drain times, refilling, production, delay for water level or no communication alarms between control panel and humidifier. See the chapter "Functions";
- Delete alarm log (Geb), counter and restore default parameters;
- Access management (Gec): interval of new Service password entry when browsing, enable quick menu (On/Off and set point), enter User password (PW0), change Service password (PW1).

f: Manual management: manual activation of fill/drain valves, group 1/2 (mist 1/2) of piezoelectric transducers, alarm relay, ambient and limit probes.

Procedure: the setting/display procedure is similar to the one for the user parameters, however password PW1 must be entered to access category G parameters.

Note:

- if no button is pressed, after around 5 min the display automatically returns to standard mode;
- the service password PW1 can be changed on screen Gec04 (and the main password on screen Gec03);
- once entered, the password remains active for a certain time, after which it needs to be entered again.

5.7 Quick access menus

The quick access menus can be used to rapidly access the unit information and settings.

Procedure:
1. Press Esc one or more times to return to the standard display;
2. Press UP/DOWN to show the required quick access menu icon;

ICON			
	Info	On/Off	Set point*

Tab. 5.f

(*) Only shown if control with probe is selected for Fa01.

3. Press Enter to enter the menu, UP/DOWN to scroll, ESC to exit.

5.6.1 Info

Read-only screens that display the main unit information:
- Humidifier size;
- Waiting time until the next wash;
- Operating hours with atomised water production;
- Total unit operating hours;
- Float level sensor status: low, working (normal operation), high;
- Dipswitch status on the control board;
- Status and operating hours of the Secondary units (if there is a Main/Secondary connection)
- Preheating probe reading (if enabled);
- Replicate request and related voltage signal for multi-Main connection.

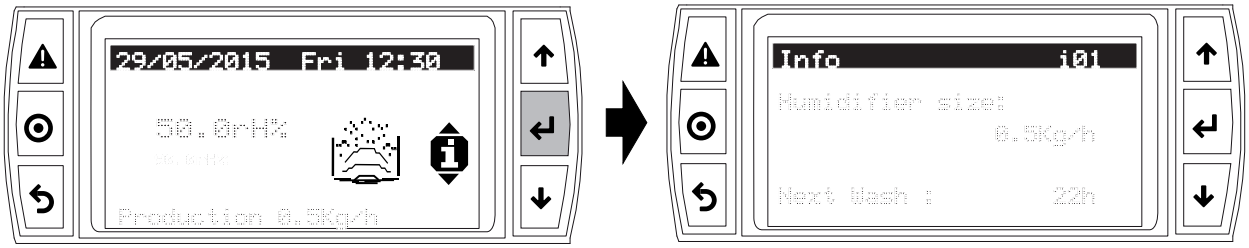

Fig. 5.e

5.6.2 Set point

Only shown if control with probe has been selected (Fa01).
On this screen, the control set point for humidity / temperature probe and limit humidity probe set point can be set.

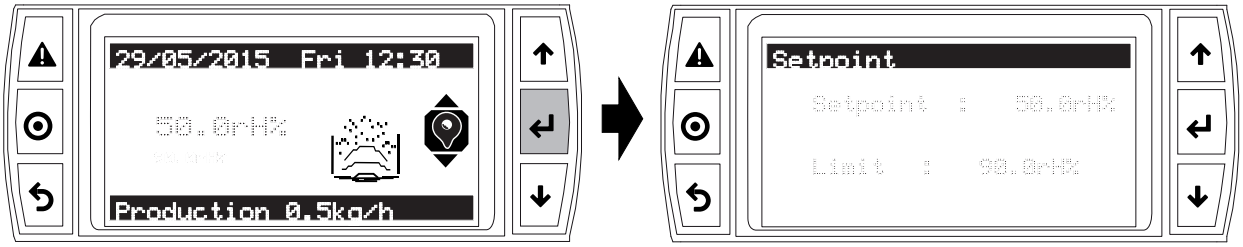

Fig. 5.f

5.6.3 On/Off

Unit On/Off from the keypad.

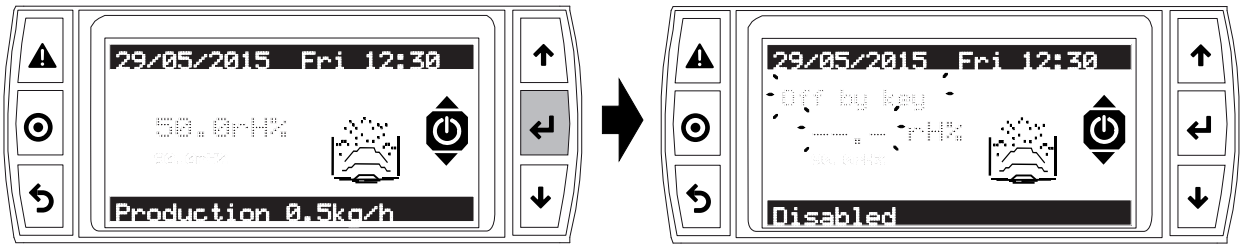

Fig. 5.g

6. COMMISSIONING ("MAIN" PANEL)

Important:
Before starting the humidifier check:
- water connections: in the event of water leaks, do not start the humidifier before having restored the connections;
- electrical connections between the humidifier and the control panel.

The following series of parameters needs to be set when commissioning the unit.

6.1 Starting

See chap. "Electrical connections"
1. The humidifier, once powered and enabled for production (remote on-off/humidistat), is ready for operation.
2. Operation will only stop if the enabling signal is no longer present.

6.2 Scheduler

Programming is weekly, with the possibility to enter up to 3 daily time bands, each with a different set point. See chap. "User interface"

Screen index	Display description	Def	Min	Max
C03	Scheduler			
	Enable scheduler ?	No	No	Yes

Tab. 6.a

6.3 Regulation type

Select whether control is based on a humidistat, external controller, humidity/temperature probe and a limit humidity probe. See chapter "Functions".

Screen index	Display description	Def	Min	Max	UOM
Fa01	Regulation				
	Regulation type	On/Off	On/Off	T probe+limit rH%	On/Off ¦ Ext. regulator ¦ Ext. regulator+limit rH% ¦ rH% probe ¦ rH% probe+Limit rH% ¦ T probe ¦ T probe+limit rH%

Tab. 6.b

6.4 Shutdown / Standby

1. To shutdown the humidifier, switch the unit Off from the keypad (see chap. "User interface);
2. The humidifier goes into standby when:
   - the remote on/off contact is open;
   - the humidity/temperature probe is present and the humidity set point has been reached;
   - the on/off contact is open and serial enabling is set to 0 (see chapter "Humidifier control via network").

When the humidifier is in standby, the tank is emptied automatically, if the valve in standby is selected as open.

Screen index	Display description	Def	Min	Max	UOM
Fc03	Settings				
	Drain valve in stand-by	Open	Closed	Open	-

Tab. 6.c

6.5 Autotest

When the humidifier is first started (from off), if enabled and humidity production is required, a test cycle is run. A complete fill and drain cycle is performed, during which the level sensor is monitored; if the test is successful, regular atomised water production will start. If the test fails, production is disabled (see the alarm table).

Screen index	Display description	Def	Min	Max	UOM
A01	On/Off				
	Enable	No	No	Yes	-
	Autotest	Yes	No	Yes	-

Tab. 6.d

6.6 Reset tank hour counter

The humidifier is fitted with an hour counter that records operation. After a set number of hours (5,000), a signal is activated to indicate maintenance should be performed on the tank and operation of the piezoelectric elements checked (see the chapter on Maintenance). To reset the hour counter at any time, go to screen Geb01.

Screen index	Display description	Def	Min	Max
Geb01	Reset Cnt/Logs			
	…			
	Reset counter	No	No	Yes

Tab. 6.e

6.7 Automatic washing

The humidifier, if enabled on the screen or via BMS, automatically runs a washing cycle at set intervals, defined by parameter "Operating period". See the functions chapter for the parameters corresponding to activation of the washing cycle. During this operation, atomised water production is stopped.

Screen index	Display description	Def	Min	Max	Value desc.
Fb01	Washings				
	Time triggered	Absolute time	Disab.	Progr.	Disabled ¦ Absolute time ¦ Working/ No working ¦ Scheduled
	Event triggered	Disab.	Disab.	From request	Disabled ¦ From digital input ¦ From request

Tab. 6.f

Screen index	Display description	Def	Min	Max	UOM
Fb03	Work wash (Fb01= Work /Standby)				
	Enabled	Yes	No	Yes	-
	Work wash period	1	1	480	min

Tab. 6.g

6.8 Manual procedures

At the end of the programming procedure, before starting the unit, manual operation can be enabled in order to:
1. run a fill/drain cycle;
2. activate production by one group of transducers (mist1/ mist 2) or both;
3. activate the alarm relay

Screen index	Display description	Def	Min	Max	UOM
Gf01	Manual management				
	Manual mode	No	No	Yes	-
Gf02	Manual mode				
	Fill	Off	Off	On	Off ¦ On
	Drain	Off	Off	On	Off ¦ On
Gf03	Manual mode				
	Mist 1	No	No	Yes	No ¦ Yes
	Mist 2	No	No	Yes	No ¦ Yes

Tab. 6.h

6.9 Probe calibration

Once the control (regulation) type has been selected, the probes can be calibrated by setting the offset. The delay for activation of the probe alarm can also be set.

Screen index	Display description	Def	Min	Max	UOM
Fa04	Regulation				
	Ambient probe (AI7)				
	Probe type: 0 to 1V ¦ 0 to 5V ¦ NTC				
	Offset	0.0	-100.0	100.0	-
	Min	0.0	0.0	100.0	-
	Max	100.0	0.0	100.0	-
	Alarm delay	0	0	999	s
Fa05	Regulation				
	Ambient probe (TH)				
	Type	rH%+T			
	Offset	0.0	-20.0	50.0	-
Fa06	Regulation				
	Limit probe (AI6)				
	Probe type: 0 to 1V ¦ 0 to 5V				
	Offset	0.0	-100.0	100.0	-
	Min	0.0	0.0	100.0	-
	Max	100.0	0.0	100.0	-
	Alarm delay	10	0	999	s

Tab. 6.i

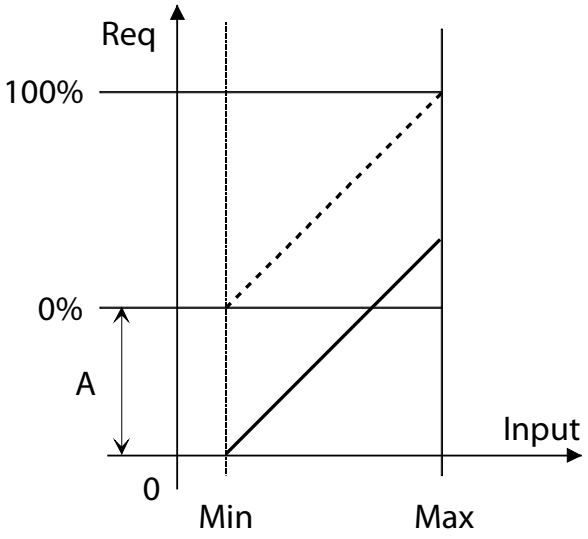

Fig. 6.a

Key

Input	Input signal	Min	Input value for min. request
Req	Request	Max	Input value for max request
A	Offset		

6.10 Access management

The delay after which the Service password (PW1) is requested can be set, and quick access (Quick menu) to the parameters via the Set point and On/Off icons disabled (see chap. "User interface"). In addition, a new password can be set, and the main password PW0 enabled to access any screen in the programming menu, not only the Service parameters.

Screen index	Display description	Def	Min	Max	UOM
Gec01	Access management				
	Password delay	1	0	30	min
Gec02	Access management				
	Quick menu	Yes	No	Yes	-
	Main menu password	No	No	Yes	-
Gec03	Access management				
	Insert new main menu password (PW0)	0000	0000	9999	-
Gec04	Access management				
	Insert new service password (PW1)	0000	0000	9999	-

Tab. 6.j

6.11 Settings

These parameters are set in the event of special needs:

1. to filter an excessive number of requests over a certain period, and avoid numerous starts and stops, enter a longer start delay;
2. if there is no water, it may be useful to extend the delay time before restarting, to avoid a premature no water alarm;
3. the alarm relay can be normally open (N.O.) or normally closed (N.C.); the solenoid valve in standby can be set as open or closed;
4. the "drain delay in standby" time is only set if the drain solenoid valve is selected as open in standby. This determines in delay for opening the drain solenoid valve after switching to standby. It is useful in the event of frequent starts/stops, to minimise the time needed to reach steady operation.

Screen index	Display description	Def	Min	Max	UOM
Fc01	Settings				
	Start delay	10	s	0	120
	Restart wait	10	min	1	60
	Alarm relay logic	N.O.	N.O.	N.C.	-
Fc03	Settings				
	Drain valve in stand-by	Open	Open	Closed	-
	Drain delay in stand-by	0	min	60	min

Tab. 6.k

6.12 Network settings

The RS485 serial card (accessory) needs to be installed on the control board in the "Main" panel. The network parameters need to be set in the event of connection to a serial network. All the controllers in the network must be set with the same protocol and communication speed parameter. By enabling serial control, the humidifier parameter can be set over the serial connection.

Screen index	Display description	Def	Min	Max	UOM
Gd01	BMS configuration				
	Protocol	Modbus	Modbus	Carel	-
	Speed	19200	1200	19200	bps
	Address	1	1	207	-
Gd02	BMS configuration				
	Serial manager	Disabled	Disabled	Enabled	-

Tab. 6.l

7. FUNCTIONS (“MAIN” PANEL)

7.1 On/Off

7.1.1 ON

At power-on, before beginning atomised water production, humiSonic temporarily runs the Autotest: to check correct operation of the float level sensor, the humidifier performs a complete tank fill cycle and then a drain complete cycle.

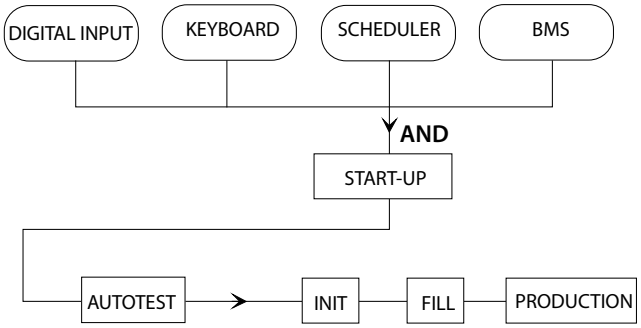

Fig. 7.a

7.1.2 OFF

Before switching from On to Off, humiSonic temporarily runs the Shutdown procedure, in which the controller deactivates the control devices and activates the drain valve. Off status involves a logical OR of the following:

- digital input;
- keypad;
- time band
- BMS.

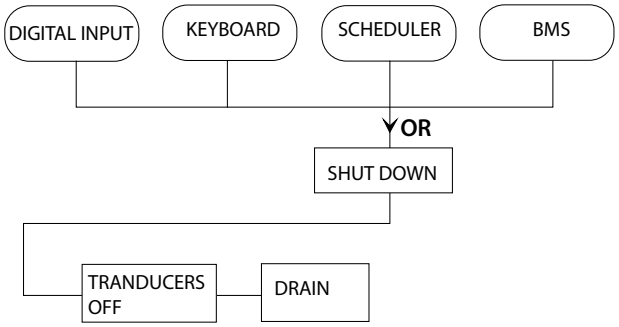

Fig. 7.b

7.2 Set point

The control and limit set points are set in the “Set point” quick menu. Based on the type of control, set the control humidity / temperature probe set point and the limit humidity probe set point. The following screens are then used to set the control differential and hysteresis.

Screen index	Display description	Def	Min	Max	UOM
Fa07	Regulation				
	Ambient probe				
	Ambient probe differential	10	0	99.9	rH%
	Limit probe differential	10	0	99.9	rH%
Fa08	Regulation				
	Reg. hysteresis	10.0	0	99.9	rH%

Tab. 7.a

7.3 Regulation (control)

See chapter “Electrical connections” for the electrical connections to the “Secondary” or “Main” electrical panel, based on the type of control.

The built-in electronic controller on humiSonic features different control algorithms, which can be selected from the user menu:

On/Off: operation in on/off mode requires the connection of an external voltage-free contact to input HST (for example, a humidistat, see terminal block). Unit capacity will therefore be all or nothing, according to the status of the external contact. The humidistat logic defines whether production is active with the contact closed (N.C.) or with the contact open.

Screen index	Display description	Def	Min	Max	UOM
Fa10	Regulation				
	Logic humidos.	N.C.	N.C.	N.O.	-

Tab. 7.b

External controller + limit rH%

Capacity modulation is proportional to an external control signal (0 to 1 V, 0 to 5V, 0 to 10V) and is limited based on the value measured by the limit humidity probe. This is the typical configuration for humiSonic installations connected to a Building Management System that provides a control signal.

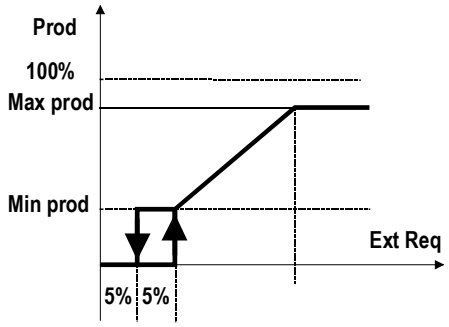

Fig. 7.c

Key

Prod	Production	Min prod	Min. production
Max prod	Maximum production	Ext Req	Ext. control signal

External controller

Same as the previous algorithm, however without the humidity probe.

rH% probe

The control probe is normally the room return temperature probe in the air duct.

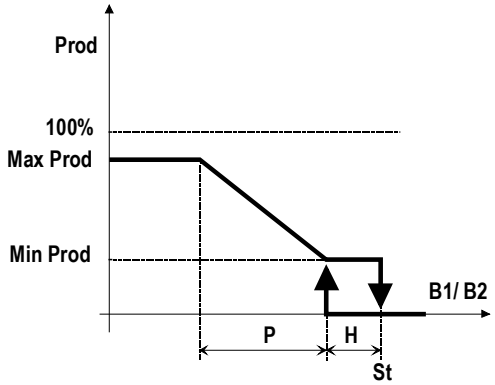

Fig. 7.d

Key

Prod	Production	B1/B2	Control/limit probe
Max prod	Max. production	P	Differential
Min prod	Minimum production	H	Hysteresis
St	Set point		

rH% probe + limit rH%
As in the previous case with limit humidity probe, normally installed downstream of the droplet separator. The limit humidity probe is usually set to a high value, e.g. 80% rH, so as to limit the maximum humidity level in the ducting and in the room. This is especially recommended in installations where the air flow-rate and temperature and humidity conditions may vary over time, and consequently an additional safety feature is useful for preventing the humidifier from over-humidifying the air and, in the worst case scenario, leading to condensation in the ducting downstream of the unit.

T probe
The control probe is normally the room return temperature probe in the air duct.

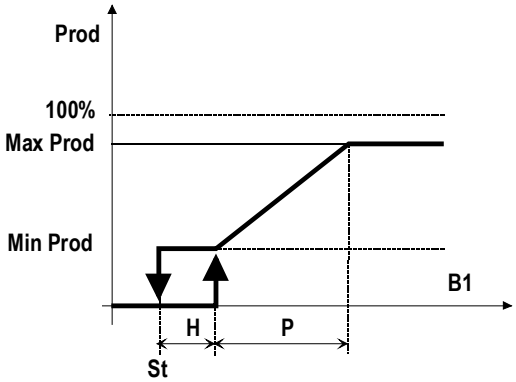

Fig. 7.e

Key

Prod	Production	B1	Temperature probe
Max prod	Maximum production	P	Differential
Min prod	Minimum production	H	Hysteresis
St	Set point		

T probe + limit rH%
As in the previous case, yet with limit humidity probe.

NTC preheating probe (option)
After enabling the function on screen Fa12, this NTC probe reads the air preheating temperature upstream of the humidifier in the air handling unit. Production will be modulated proportionally to the value measured by the probe, according to the graph shown in Fig. 7.e, where H+P is the preheat differential and H is a fixed hysteresis equal to 10% of the differential. The preheating set point (default 28°C) and preheating differential (default 10°C) can be set on screen Fa13.

7.4 Probe alarms

The settings of the maximum control probe and limit probe limits determine activation of the alarms. See the alarm table.

Screen index	Display description	Def	Min	Max	UOM
Fa09	Regulation				
	Max ambient humidity	80.0	0	100.0	rH%
	Min ambient humidity	0.0	0	100.0	rH%
	Max limit humidity	100.0	0	100.0	rH%
	Min limit humidity	0.0	0	100.0	rH%

Tab. 7.c

7.5 Flow-rate modulation

Atomised water flow-rate is modulated between the minimum and maximum rated capacity.

Screen index	Display description	Def	Min	Max	UOM
Fa02	Regulation				
	Max prod	100	10	100	%
	Min prod	10	0	100	%
Fa11	Regulation				
	Mist modulation mode	Series	Series	Parallel	-
	Mist modulation period	1	1	10	s

Tab. 7.d

7.5.1 Parallel (dipswitch 8 Off)

Atomised water flow-rate can be modulated as a percentage from 10% to 100% (Max prod and min prod) of the rated value, with alternating starts and stops of the transducers over a set period (modulation period, default 1 second). The flow-rate is set based on the Max Prod parameter (default 100%) and the request from the external signal (for proportional control).

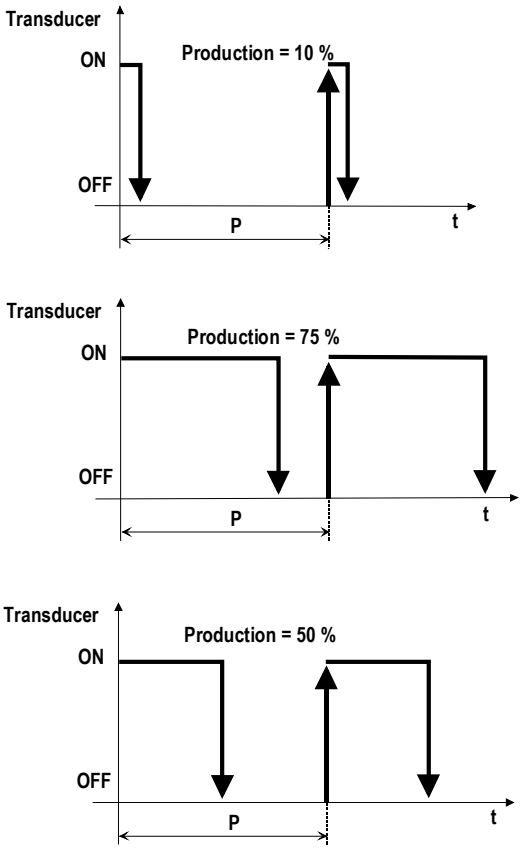

Fig. 7.f

Key

Transducer	Piezoelectric transducers	t	time
P	Modulation period		

If the flow-rate is 100%, the transducers are always on.

7.5.2 Series (dipswitch 8 On)

Atomised water flow-rate can be modulated as a percentage from 10% to 100% of the rated capacity. Each humidifier is managed with two groups of transducers (front and rear) and each line is generates 50% of total production. If the request is set by the external signal (if proportional control is active) and the Max prod parameter is 100%, both the lines of transducers will be activated. For lower output, production will be shared between the two lines of transducers as follows:

- 51% - 99%: one line of transducers is always activated to generate 50% of required production, while the other modulates as described in the previous paragraph to generate the remaining percentage. (e.g. 75% request: one line of transducers is always activated, the other modulates at 50%);
- 10% - 50%: one line of transducers is always off, the other modulates as described in the previous paragraph to generate the required production (e.g. 25% request: one line of transducers is always off, the other modulates at 50%).

The distribution of production between the two lines of transducers is rotated every hour of operation so as to avoid non-uniform ageing.

7.6 Washing

The washing cycle involves a complete drain cycle, a phase in which fill and drain are activated together to flush out any residues in the tank, a complete fill cycle and finally another complete drain cycle. During this operation, atomised water production is stopped.
The washing cycle can be time triggered or event triggered. Once activated, the washing cycle lasts the time set on screen Fb09.

Screen index	Display description	Def	Min	Max	UOM
Fb09	Wash settings				
	Washing time	1	0	10	min
	Only if ready ?	NO	NO	YES	-

Tab. 7.e

The washing cycle can only be performed if humiSonic is operating (only if ready ? = YES), or if it is operating or in standby (only if ready ? = NO). It is assumed that the humidifier is not operating because it is disabled (see ON activation conditions). The washing cycle can also be activated on the screen or via BMS, if enabled.

Screen index	Display description	Def	Min	Max	UOM
Fb02	Washings				
	From mask	Yes	Yes	No	-
	From BMS	Yes	Yes	No	-

Tab. 7.f

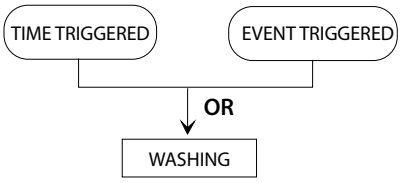

Fig. 7.g

Screen index	Display description	Selection
Fb01	Washings	
	Time triggered	Disabled ¦ Absolute time ¦ Working/ No working ¦ Scheduled
	Event triggered	Disabled ¦ From digital input ¦ From request

Tab. 7.g

7.6.1 Time triggered

Absolute time: the washing cycle is run periodically, and the period is defined on screen Fb05.

Screen index	Display description	Def	Min	Max	UOM
Fb05	Absolute				
	Period	24	0	999	h/m
	Next wash	24	0	999	h/m

Tab. 7.h

The duration of the period can be expressed in either hours or minutes (press UP/DOWN to changeover from one to the other), based on the screen display (it is NOT the sum of the two times).

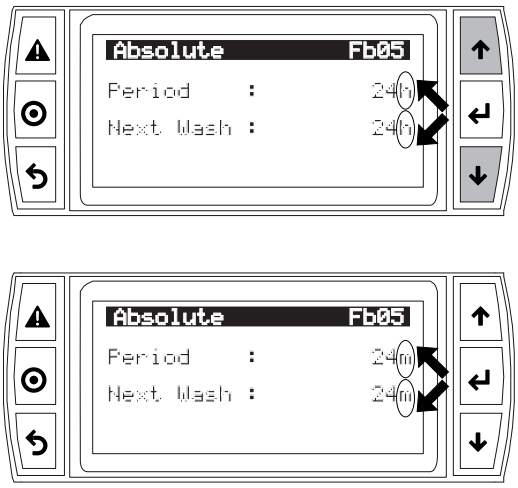

Fig. 7.h

Work / stand by: the type of washing cycle is enabled on screens Fb03/ Fb04; the cycle starts after the corresponding operating period.

Screen index	Display description	Def	Min	Max	UOM
Fb03	Work wash				
	Enabled	Yes	No	Yes	-
	Work wash period	1	0	480	h/min
Fb04	Nowork wash				
	Enabled	Yes	No	Yes	-
	Nowork period	24	1	480	h/min
	Next wash	24	1	480	h/min

Tab. 7.i

Scheduled: the starting time and day are set on screen Fb06.

Screen index	Display description	Def	Min	Max	UOM
Fb06	Scheduled				
	Start	00:00	00:00	23:59	-
	Select day ?	No	No	Yes	-
	Every	Monday	Monday	Sunday	

Tab. 7.j

7.6.2 Event triggered

Digital input: select whether the digital input or the humidistat enables the action, and whether the event is from open to closed (Off→On) or vice-versa (On→ Off).

Screen index	Display description	Def	Min	Max	UOM
Fb07	From DI				
	Input	Humidistat	Humidistat	Rem.On/Off	-
	When	On → Off	On → Off	Off → On	-

Tab. 7.k

From request: the request can derive from a probe or a humidistat (rise/ fall = request activated/deactivated).

Screen index	Display description	Def	Min	Max	UOM
Fb08	From request				
	When request	Rise	Rise	Fall	-

Tab. 7.l

7.7 Timings

The activation times are applied during unit operation and are used by the controller to detect any malfunctions.

7.7.1 Fill/drain times

Tmax fill: maximum fill solenoid valve opening time.

Model	Load T max [min] default
UU02D	6
UU05D	9
UU07D	12
UU09D	15
UU14D	21
UU18D	24

The humidifier detects when there is no feedwater (or the quantity is too low), by checking the level sensor status after opening the fill solenoid valve. If the tank is empty, and sensor activation is not detected within the time set by parameter "Tmax fill", the humidifier is not activated, rather the drain valve opens, after which there is a waiting time equal to the number of minutes set by parameter "Restart wait" (Fc01, default 10), during the which is the message is shown on the display:

Waiting (Restart: xx minutes)

xx displays the minutes remaining until restart (starting from the value set for Fc01), after which there is another refill attempt. If this is successful, production restarts, otherwise there is a further "Restart wait (Fc01)" for the set number of minutes. The process is repeated until the sensor detects water is present. For the first two attempts, no alarm is generated, however if after the third attempt the procedure is not successful, alarm EF is generated, which is reset automatically when the humidifier detects water is present again. If the water fill cycle occurs during atomised water production, see the paragraph "Tmax refill".

Tmax drain: maximum drain solenoid valve opening time.

Model	Drain T max [s] default
UU02D	75
UU05D	100
UU07D	150
UU09D	200
UU14D	300
UU18D	400

The humidifier detects when the water fails to drain (or the level is too high), by checking the level sensor status after opening the drain solenoid valve. If sensor activation is not detected within the time set by parameter "Tmax drain", the humidifier keeps the drain solenoid valve open and activates the wait procedure, as described in the previous paragraph, displaying alarm Ed. The humidifier will reset the alarm and resume normal operation when the low water level is correctly measured.

Empty drain T: time during which the drain solenoid valve remains open after correctly measuring the low water level.

Model	Empty drain T. [s] default
UU02D	60
UU05D	80
UU07D	120
UU09D	160
UU14D	240
UU18D	300

Following the water drain cycle, this is the time that must elapse after the level sensor measures the low water level to ensure the tank is completely emptied. This is useful if for parameter Fc03 the drain solenoid valve has been selected as closed in standby.

Screen index	Display description	Def	Min	Max	UOM
Gea01	Timings				
	Tmax fill	*	0	30	min
	Tmax drain	*	0	1200	s
	Empty drain T.	*	0	1200	s

Tab. 7.m

*: Depending on humiSonic size, see previous tables.

7.7.2 Production, refilling times

Tmax prod: maximum atomised water production time (drivers active), during which the level sensor must signal low water level.

Low lev delay: filtering time for low water detection. When the humidifier detects the low level during production, it waits the Low lev delay time before activating the load in order to reintegrate the water to the working level.

Max Hlev time: maximum time for measuring the high water level.

The humidifier checks the water level in the tank during production of atomised water. If the level does not fall, the following faults may have occurred:

1. piezoelectric transducer malfunction;
2. leaking fill solenoid valve;
3. fan malfunction.

If after the time set for Tmax prod (in minutes, default 30), the low water level has not been reached, atomised water production is stopped and the wait procedure starts (see the description in Tmax fill), after which the control attempts to resume production. If the condition remains, alarm EP will be activated, shutting down the unit. If after a percentage of Tmax prod, set on screen Gea03 (default 70%) the water level is above the high level for a time equal to "Max Hlev time", atomised water production stops and warning EL is generated. The wait procedure then starts, after which the controller will attempt to restart production. Warning EL is reset at the end of a production cycle that ends correctly. Alarm EL is also generated during standby if an abnormal water level is measured (the water level differs from the level measured when switching to standby, for a time equal to Max Hlev time).

Tmin prod: minimum atomised water production time (driver active) during which the low level sensor must not be activated.

Tmin prod sets a minimum production time (default 1 minute). If the production cycle lasts less than this time, the drain solenoid valve may not be tight or the fill solenoid valve flow-rate may be too low. The controller, in this case, activates the following procedures:

1. at the end of the first cycle, ending after less than Tmin prod, the Refill time is increased (50% more than Refill time);
2. at the end of the second cycle, ending after less than Tmin prod, the water refill time is further increased (100% more than Refill time) and chattering* of the drain solenoid valve is activated during the first automatic washing cycle;
3. at the end of the third cycle, ending after less than Tmin prod, the water refill time is further increased (150% more than Refill time) and a washing cycle is performed, including chattering* as activated in the previous step. Warning Ed will also be generated.
4. following the last stage, a new production cycle will be performed.

If the cause of the error persists, the controller will start the procedure from the beginning again, until it a full cycle is completed within the defined times. Any warnings will also be reset.

*Chattering: series of rapid opening/closing cycles of the drain solenoid valve, aimed at removing any residues (scale, dust, etc.) that prevent it from closing correctly.

Screen index	Display description	Def	Min	Max	UOM
Gea04	Timings				
	Low lev delay	10	0	200	s
	MaxHLev Time	10	1	60	s

Tab. 7.n

Refill time: time the fill solenoid valve is kept open for, after the control level (intermediate) has been reached during atomised water production.

Model	Refilling T. [s] default
UU02D	20
UU05D	28
UU07D	40
UU09D	52
UU14D	80
UU18D	100

Tmax refill: maximum time the drivers remain active for during a water refilling cycle, after the level sensor has measured the low water level during atomised water production.

Model	Refilling T. max [s] default
UU02D	40
UU05D	60
UU07D	80
UU09D	100
UU14D	160
UU18D	200

The piezoelectric transducers, by nature, if operated without water, will be quickly damaged until failing. To prevent this from happening, the controller ensures, via the level sensor, that even in the event of malfunctions the transducers are never activated without water present. When starting with an empty tank, the transducers are only activated when the low level is measured and, subsequently, the "Refill time" has elapsed. During refilling when the unit is operating, that is, after the low level has fallen due to atomised water consumption with consequent activation of the fill solenoid valve, if the level is not restored before the "Tmax refill" time, the transducers are switched off, while the fill cycle continues until:

1) the level has been restored and the "Refill time" has elapsed. The transducers are then reactivated
2) on activation of the fill valve, the time set for Tmax fill must elapse. Then the wait procedure will be activated, as described previously.

If, on the other hand, the level is correctly restored within the "Tmax refill" time, the transducers remain on and the fill cycle continues until the end of the Refill time.

Screen index	Display description	Def	Min	Max	UOM
Gea02	Timings				
	Tmax refill	*	1	60	s
	Refill time	*	0	120	s
Gea03	Timings				
	Tmax_prod	30	1	200	min
	Tmin_prod	1	1	200	min

Tab. 7.o

*: Depending on humiSonic size, see previous tables.

Low lev delay: low level filtering time for activating the fill cycle.

The float sensor must remain active for the time set by Low lev delay before the fill cycle (Refill) or the complete emptying timer (Empty Drain) is activated).

7.7.3 Unit offline alarm times

Remote board offline time: time after which the remote unit is deactivated (standby) if there is no serial connection with the control panel.

The remote unit checks communication status with the "Main" panel, and if for some reason there is no communication for the time set for the parameter, the unit goes into "safety" mode, that is, atomised water production is stopped and the drain cycle is activated.

Main board offline time: time after which the control panel generates the "Remote unit offline" alarm if no serial communication is detected.

If the "Main board offline time" elapses, and the control panel continues to not receive a response, the "Remote unit offline" alarm is activated. In this status, atomised water production can no longer be activated.

Screen index	Display description	Def	Min	Max	UOM
Gea05	Timings				
	Remote board offline time	10	0	240	s
	Main board offline time	30	0	999	s

Tab. 7.p

8. PARAMETERS TABLE (“MAIN” ELECTR. PANEL)

Mask	Display description	Notes	Def.	UOM	Min	Max	Value description	Type	R/W
Press UP/DOWN to display the Info icon and then press Enter to access the Information quick menu									
Info									
i01	Humidifier size		0,5	kg/h	0,5	18		I	R
	Next wash		-	h				I	R
i02	Work hours counter		-	h				I	R
	Machine hours counter		-	h				I	R
i03	Water level sensor state		-	-	Low	High	Low ¦ Work ¦ High	I	R
i04	Dip-switch state								R
i05	Secondary 1 status			-				I	R
	Secondary 1 op. hour counter			h				I	R
i06	Secondary 2 status			-				I	R
	Secondary 2 op. hour counter			h				I	R
i07	Secondary 3 status			-				I	R
	Secondary 3 op. hour counter			h				I	R
i08	Preheat probe			°C	-50	90		I	R
i09	Output request		-	%	0.0	100.0		I	R
	Output signal		-	V	0.0	10.0		I	R
A.	On/Off Unit								
A01	On/Off								
	Enable		No	-	No	Yes	No ¦ Yes	D	R/W
	Autotest		Yes	-	No	Yes	No ¦ Yes	D	R/W
	Manual wash		No	-	No	Yes	No ¦ Yes	D	R/W
	Max Prod		100	%	10	100		I	R/W
B.	Setpoint								
B01	Setpoint	Fa01=reg. with probe	50.0	rH % / °C	10.0	80.0		I	R/W
	Limit		90.0	rH %	0	100.0		I	R/W
C.	Clock/ Scheduler								
C01	Clock								
	Day		Monday	day	Monday	Sunday	-	I	R
	Date		01/01/2015	dd/mm/yy	--/--/----	--/--/----	dd/mm/yy	I	R/W
	Hour		hh:mm	hh:mm	00:00	23:59	hh:mm	I	R/W
C02	Clock								
	DST (daylight saving time):		Enable	-	Enable	Disable		D	R/W
	Transition time		60	min	0	240		I	R/W
	Start:		Last	-	First	Last	First ¦ ...¦ Fourth¦ Last	I	R/W
			Sunday	day	Monday	Sunday	Monday ¦ ...¦ Sunday ¦ ***	I	R/W
	in		March	month	January	--	January ¦ ... ¦ December ¦ - -	I	R/W
	at		2.00	hour	0.00	23.00		I	R/W
	End:		Last	-	First	Last	First ¦ ...¦ Fourth¦ Last	I	R/W
			Sunday	day	Monday	***	Monday ¦ ...¦ Sunday	I	R/W
	in		October	month	January	December	January ¦ ... ¦ December	I	R/W
	at		3.00	ora	0.00	23.00		I	R/W
C03	Scheduler								
	Enable scheduler ?		No	-	No	Yes	No ¦ Yes	D	R/W
C04	Time bands (press Enter and UP/DOWN to check the box)								
	Day		Monday	-	Monday	Sunday	Monday ¦ ...¦ Sunday	I	R/W
			Time 1	hh/mm	00:00	23:59		I	R/W
			Off	-	Off	On+Set	Off ¦ On ¦ On +Set	I	R/W
			Humidity set point	%rH	0	100		I	R/W
			Time 2	hh/mm	00:00	23:59		I	R/W
			Off	-	Off	On+Set	Off ¦ On ¦ On +Set	I	R/W
			Humidity set point	%rH	0	100		I	R/W
			Time 3	hh/mm	00:00	23:59		I	R/W
			Off	-	Off	On+Set	Off ¦ On ¦ On +Set	I	R/W
			Humidity set point	%rH	0	100		I	R/W
			Time 4	hh/mm	00:00	23:59		I	R/W
			Off	-	Off	On+Set	Off ¦ On ¦ On +Set	I	R/W
			Humidity set point	%rH	0	100		I	R/W
			Time 5	hh/mm	00:00	23:59		I	R/W
			Off	-	Off	On+Set	Off ¦ On ¦ On +Set	I	R/W
			Humidity set point	%rH	0	100		I	R/W
			Time 6	hh/mm	00:00	23:59		I	R/W
			Off	-	Off	On+Set	Off ¦ On ¦ On +Set	I	R/W
			Humidity set point	%rH	0	100		I	R/W
D.	Main/Secondary								
	Secondary Manager								
E.	Data logger								
E01	Data logger								
	N°		-	-	001	50	Nr. alarm	I	R
	Hour		-	hour : min	00:00	23:59	Time of alarm activation	I	R
	Date		-	dd : mm : yy	01 : 01 : 00	01 : 01 : 00	Date of alarm activation	I	R
F.	User								
	User menu								
a.	Regulation								
Fa01	Regulation								
	Regulation type		Probe rH%+limit rH%	-	On/Off	Probe T+Limit rH%	On/Off ¦ Ext.regulator ¦ Ext. regulator+limit rH% ¦ Probe rH% ¦ probe rH%+Limit rH% ¦ Probe T ¦ Probe T+Limit rH%	I	R/W
	Unit of measure		°C-Kg/h		°C-Kg/h	°F-lb/h	°C-Kg/h ¦ °F-lb/h	D	R/W
Fa02	Regulation								
	Max Prod		100	%	10	100		I	R/W
	Max Prod		100	%	10	100		I	R/W
	Min Prod		10	%	0	100		I	R/W
Fa03	Regulation								
	Ambient probe		Analog	-	Analog	HYHU000000	Analog ¦ HYHU000000	D	R/W

Mask	Display description	Notes	Def.	UOM	Min	Max	Value description	Type	R/W
Fa04	Regulation								
	Ambient probe		(AI7)						
	Type		0...1 V	-	0...1 V	0...1 V¦ 0...5 V ¦ 0…10 V ¦ NTC		I	R/W
	Offset		0.0		-100.0	100.0		I	R/W
	Min		0.0		0.0	100.0		I	R/W
	Max		100.0		0.0	100.0		I	R/W
	Alarm delay		0	s	0	999		I	R/W
Fa05	Regulation	Fa03=HYHU...							
	Ambient probe (TH)								
	Type		rH%+T						
	Offset		0.0		-20.0	50.0		I	R/W
Fa06	Regulation						Fa01: reg.=...+lim.rH%		
	Limit probe		(AI6)						
	Type		0...5 V	-	0...1 V	0...1 V¦ 0...5 V		I	R/W
	Offset		0.0		-100.0	100.0		I	R/W
	Min		0.0		0.0	100.0		I	R/W
	Max		100.0		0.0	100.0		I	R/W
	Alarm delay		10	s	0	999		I	R/W
Fa07	Regulation						Fa01: reg.=probe (+lim.rH%)		
	Ambient probe differential		10	rH%/°C	0	99.9		I	R/W
	Limit probe differential		10	rH%	0	99.9		I	R/W
Fa08	Regulation						Fa01: reg.=probe ...		
	Reg. hysteresis		10.0	%	0	99.9		I	R/W
Fa09	Regulation						Fa01: reg.=probe (+lim.rH%)		
	Max amb. H/T		80.0	rH%/°C	0	100.0		I	R/W
	Min amb. H/T		0.0	rH%/°C	0	100.0		I	R/W
	Max Lim. Hum.		100.0	rH%	0	100.0		I	R/W
	Min Lim. Hum.		0.0	rH%	0	100.0		I	R/W
Fa10	Regulation						Fa01: reg.=On/Off		
	Logic humidos.		N.C.	-	N.C.	N.O.	N.C: production if closed contact	I	R/W
Fa11	Regulation								
	Mist modulation mode		Serie	-	Serie	Parallel	See DIP-SWITCH settings	I	R
	Mist modulation period		1	s	1	10		I	R/W
Fa12	Enable preheating probe		No	-	No	Yes		D	R/W
	Alarm delay		0	s	0	999		I	R/W
Fa13	Preheat set point		28	°C	-100	100		I	R/W
	Preheat differential		10	°C	-100	100		I	R/W
Fa14	PR% out type (output request)		0-5V	-	0-5V	0-10V		I	R/W
b.	Washings								
Fb01	Washings								
	Time triggered	*Time or event triggered (OR condition)*	Absolute time	-	Disabled	Scheduled	Disabled ¦ Absolute time ¦ Working/ No working ¦ Scheduled	I	R/W
	Event triggered		Disabled	-	Disabled	From request	Disabled ¦ From digital input ¦ From request	I	R/W
Fb02	Washings								
	From mask		Yes	-	Yes	No	Yes ¦ No	I	R/W
	From BMS		Yes	-	Yes	No	Yes ¦ No	I	R/W
Fb03	Work wash	Fb01=working/ no working							
	Enabled		Yes		No	Yes	Yes ¦ No	I	R/W
	Work wash period		1	min	1	480		I	R/W
Fb04	Nowork wash	Fb01= working/no working							
	Enabled		Yes	-	No	Yes	Yes¦ No	I	R/W
	Nowork period		24	h/m	1	480		I	R/W
	Next wash		24	h/m	1	480		I	R/W
Fb05	Absolute	Fb01= absolute time							
	Period		24	h/m	0	999		I	R/W
	Next wash		24	h/m	0	999		I	R/W
Fb06	Scheduled	Fb01=Progr.							
	Start		00:00	hh/min	00:00	23:59		I	R/W
	Select day ?		No		No	Yes		D	R/W
	Every		Monday		Monday	Sunday		I	R/W
Fb07	From DI	Fb01=da DI							
	Input		Humidostat		Humidostat	Rem. On/Off		D	R/W
	When	Activ. event	On --> Off		On --> Off	Off --> On		D	R/W
Fb08	From request	Fb01=from request							
	When request		Rise	-	Rise	Falls		D	R/W
Fb09	Wash settings	Fb01=abs. time							
	Washing time		1	min	0	10		I	R/W
	Only if ready ?		No		No	Yes		D	R/W
c. Settings									
Fc01	Settings								
	Start delay		10	s	0	120		I	R/W
	Restart wait		10	min	1	60		I	R/W
Fc02	Settings								
	Alarm relay logic		N.O.	-	N.O.	N.C.		D	R/W
	Status relay		Production		Production	Maintenance	Production ¦ Maintenance	I	R/W
	Logic		N.O.	-	N.O.	N.C.		D	R/W
Fc03	Settings								
	Drain valve in stand-by(*)		Open	-	Open	Closed		D	R/W
	Drain delay in stand-by	(*)=Open	0	min	0	60		I	R/W
G.	Service								
a.	Change language								
	Language		Italian	-	English	Italian		D	R/W
b.	System information								

Mask	Display description	Notes	Def.	UOM	Min	Max	Value description	Type	R/W
Gb01	Information								
	FLSTDMHUSU		SW name						
	Version		0.3.008B						
	Date		-	dd/mm/yy			Date software release	I	R
	Bios			dd/mm/yy			BIOS release date	I	R
	Boot			dd/mm/yy			BOOT release date	I	R
Gb02	Information								
	Board type		---						
	Board size		---						
	Total flash		2048	KB				I	R
	RAM		512	KB				I	R
	Built-in type		None					I	R
	Main cycle		-	ms				I	R
Gb03	Firmw. release		-					I	R
	HW Id		-					I	R
	Functional Test		-					I	R
c.	Working hours								
Gc01	Work counter		0	h	0	32767		I	R/W
	Machine counter		0	h	0	32767		I	R/W
Gc02	Hours counter								
	Maintenance hours		5000	h	0	20000		I	R/W
	Remainder every		60	min	0	240		I	R/W
d.	BMS configuration								
	Service password								
	Insert service password (PW1)								
Gd01	BMS configuration								
	Protocol		Modbus	-	Modbus	Carel	Modbus ¦ Carel	D	R/W
	Speed		19200	bps	1200	19200	1200 ¦ 2400 ¦ 4800 ¦ 9600 ¦ 19200	I	R/W
	Address		1	-	1	207		I	R/W
Gd02	BMS configuration								
	Serial manager		Disabled		Disabled	On/off + Control + Limit	Disabled | On/off | On/off + Control | On/off + Control + Limit	I	R/W
e.	Service settings								
a.	Timings								
Gea01	Timings								
	Tmax fill		see chapt. 7.7.1	min	0	30		I	R/W
	Tmax drain		see chapt. 7.7.1	s	0	300		I	R/W
	Empty Drain T.		see chapt. 7.7.1	s	0	60		I	R/W
Gea02	Timings								
	Tmax Refill		see chapt. 7.7.2	s	1	60		I	R/W
	Refill time		see chapt. 7.7.2	s	0	120		I	R/W
Gea03	Timings								
	Tmax prod.		30	min	1	200		I	R/W
	Level test at Tmax production		70	%	50	90			
	Tmin prod.		1	min	1	200		I	R/W
Gea04	Timings								
	Low lev delay		10	s	0	200		I	R/W
	Max HLev Time		10	s	1	60		I	R/W
Gea05	Timings								
	Remote board offline time		30	s	0	240		I	R/W
	Main board offline time		30	s	0	999		I	R/W
b.	Reset / Default								
Geb01	Reset Cnt/Logs								
	Delete data logger		No	-	No	Yes	No ¦ Yes	D	R/W
	Reset counter		No	-	No	Yes	No ¦ Yes	D	R/W
Geb02	DEFAULT INSTALLATION: erase user settings and install global default value ("Main" panel)		No	-	No	Yes	No ¦ Yes	D	R/W
Geb03	Install default parameters on remote unit (humidifier)		No	-	No	Yes	No ¦ Yes	D	R/W
c.	Access management								
Gec01	Access management								
	Password delay		1	min	0	30		D	R/W
Gec02	Access management								
	Quick menu		Yes	-	No	Yes	No ¦ Si	D	R/W
	Main menu password		No		No	Yes	No ¦ Si	D	R/W
Gec03	Access management								
	Insert new main menu password (PW0)		0000		0000	9999		I	R/W
Gec04	Access management								
	Insert new service password (PW1)		0000		0000	9999		I	R/W
f.	Manual management								
Gf01	Manual mode								
	Manual mode		No	-	No	Yes	No ¦ Yes	D	R/W
Gf02	Manual management	Gf01:mod=si							
	Fill		Off	-	Off	On	Off ¦ On	D	R/W
	Drain		On	-	Off	On	Off ¦ On	D	R/W
Gf03	Manual management								
	Mist 1		No	-	No	Yes	No ¦ Yes	D	R/W
	Mist 2		No	-	No	Yes	No ¦ Yes	D	R/W
	Alarm relè		On	-	Off	On	Off ¦ On	D	R/W
Gf04	Manual management								
	Ambient probe		0	-	0	1000		I	R/W
	Limit probe		0	-	0	1000		I	R/W

Tab. 8.a

8.1 Supervisor variable list

The interface to an RS485 supervisor network using the Carel/Modbus protocol with a maximum baud rate of 19200 bps requires installation of the optional opto-isolated card PCOS004850 and the plastic support PCOS00S030 that fixes the optional card to the electronic control board slot on the "Main" electrical panel board.

The serial line is configured by default with the following parameters:
- address 1
- baud rate 19200 bps
- frame 8, N, 2 (not modifiable)

It is recommended to not set any variables that are not shown in the table, even if they are visible on the supervisor, so as to not risk comprising correct humidifier operation.

CAREL	Modbus®	Analogue variables (Modbus®: REGISTERS)	Type	Screen index
4	4	Instant production	D	Main screen
5	5	Main humidifier capacity	D	i01 (in the absence of Secondaries)
6	6	Secondary humidifier 1 capacity	D	D02
7	7	Secondary humidifier 2 capacity	D	D04
8	8	Secondary humidifier 3 capacity	D	D06
14	14	Preheat set point	R/W	Fa13
15	15	Preheat differential	R/W	Fa13
19	19	Total Main + Secondary capacity	D	i01
20	20	Room probe	D	Main screen
22	22	Limit probe	D	Main screen
23	23	Room set point	R/W	A01
24	24	Limit set point	R/W	A01
25	25	Min NTC main probe	R/W	Fa04
26	26	Max NTC main probe	R/W	Fa04
29	29	Room probe differential	R/W	Fa07
30	30	Limit probe differential	R/W	Fa07
31	31	Control hysteresis	R/W	Fa08
32	32	Maximum value read by active room probe	R/W	Fa09
33	33	Minimum value read by active room probe	R/W	Fa09
34	34	Maximum value read by active limit probe	R/W	Fa09
35	35	Minimum value read by active limit probe	R/W	Fa09

Tab. 8.b

CAREL	Modbus®	Digital variables (Modbus®: COILS)	Type	Screen index
9	9	Low level	R	i03
10	10	High level	R	i03
12	12	Autotest completed	R	-
18	18	Production in progress	R	-
19	19	Fill	R	-
20	20	Drain	R	-
21	21	Piezoelectric transducers row 1 status	R	-
22	22	Piezoelectric transducers row 2 status	R	-
26	26	Manual drain	R/W	Gf02
28	28	Reset counter	R/W	Geb01
29	29	Reset alarms	R/W	-
34	34	Secondary 1 online	R	D01
35	35	Secondary 2 online	R	D01
36	36	Secondary 3 online	R	D01
39	39	Skipping wash	R/W	-
40	40	Disable Secondary 1	R/W	-
41	41	Disable Secondary 2	R/W	-
42	42	Disable Secondary 3	R/W	-
50	50	Manual mode	R/W	Gf01
51	51	Alarm relay	R	-
52	52	Status relay	R	-
53	53	Remote on/off	R	-
54	54	Humidistat status	R	-
55	55	On/Off from keypad	R/W	A01
57	57	Enable scheduler	R/W	C03
58	58	Unit of measure SI/IP	R/W	Fa01
59	59	Analogue room probe/HYHU	R/W	Fa03
60	60	Digital humidistat input logic	R/W	Fa10
61	61	Enable manual wash activation from screen A01	R/W	Fb02
62	62	Enable manual wash activation from BMS serial	R/W	Fb02
63	63	Serial wash command	R/W	-
64	64	Enable wash during operation	R/W	Fb03
65	65	Unit of measure for wash time during operation	R/W	Fb03
66	66	Enable wash due to inactivity	R/W	Fb04
67	67	Unit of measure for wash time due to inactivity	R/W	Fb04
68	68	Unit of measure for total wash time	R/W	Fb05
69	69	Enable day selection for programmed washing	R/W	Fb06
70	70	Type of digital input for physical washing event	R/W	Fb07
71	71	Digital input logic for physical washing event	R/W	Fb07
72	72	Request logic for physical washing event	R/W	Fb08
73	73	Washing only if ready	R/W	Fb09
74	74	Alarm relay logic	R/W	Fc02

CAREL	Modbus®	Digital variables (Modbus®: COILS)	Type	Screen index
75	75	Status relay function	R	Fc02
76	76	State relay logic	R/W	Fc02
77	77	Enabling ON/OFF management from BMS	R/W	Gd02
78	78	Disable via serial	R/W	-
79	79	Management enable required by BMS	R/W	-
82	82	Enable preheat probe	R/W	Fa12

Tab. 8.c

CAREL	Modbus®	Integer variables (Modbus®: REGISTERS)	Type	Screen index
2	210	Firmware release	R	Gb03
4	212	Hardware id	R	Gb03
7	215	Humidifier status	R	Schermata principale
13	224	Dipswitch status	R	i04
27	235	Max production T	R/W	Gea03
28	236	Min production T	R/W	Gea03
32	240	Wash duration	R/W	Fb09
33	241	Delay at start-up	R/W	Fc01
34	242	Hours for maintenance	R/W	Gc02
35	243	Maintenance reminder	R/W	Gc02
36	244	Modulation period	R/W	Fa11
39	247	Max fill T	R/W	Gea01
40	248	Refill T	R/W	Gea02
41	249	Max drain T	R/W	Gea01
42	250	Empty drain time	R/W	Gea01
43	251	Low lev delay	R/W	Gea04
53	261	Operating hour counter	R	Gc01
54	262	Unit hour counter	R	Gc01
62	270	Serial Secondary Command	R/W	D03/D05/D07
63	271	Secondary Value	R/W	D03/D05/D07
65	273	Remote board offline time	R/W	Gea05
69	277	Waiting for restart	R/W	Fc01
70	278	Percentage of max prod T for level test	R/W	Gea03
72	280	Drain delay in standby	R/W	Fc03
73	281	Max refill T	R/W	Gea02
74	282	Max HLev Time	R/W	Gea04
87	295	Secondary 1 FW release	R	D02
89	297	Secondary 1 status	R	D02
92	300	Secondary 1 hour counter	R	D02
93	301	Secondary 2 FW release	R	D04
95	303	Secondary 2 status	R	D04
98	306	Secondary 2 hour counter	R	D04
99	307	Secondary 3 FW release	R	D06
101	309	Secondary 3 status	R	D06
104	312	Secondary 3 hour counter	R	D06
105	313	Piezoelectric transducer hour counter	R	-
106	314	Countdown to replace piezoelectric transducers	R	-
107	315	Life of piezoelectric transducers	R/W	-
108	316	SW Version	R	Gb01
109	317	SW Date	R	Gb01
110	318	Percentage output	R	i09
111	319	Type of control	R/W	Fa01
112	320	Max_production	R/W	Fa02
113	321	Min_production	R/W	Fa02
114	322	Type of main probe	R/W	Fa04
115	323	Main probe offset	R/W	Fa04
116	324	Min active main probe	R/W	Fa04
117	325	Max active main probe	R/W	Fa04
118	326	Main probe alarm delay	R/W	Fa04
119	327	Limit probe type	R/W	Fa06
120	328	Limit probe offset	R/W	Fa06
121	329	Min active limit probe	R/W	Fa06
122	330	Max active limit probe	R/W	Fa06
123	331	Limit probe alarm delay	R/W	Fa06
124	332	Time event for wash activation	R/W	Fb01
125	333	Time event for wash activation	R/W	Fb01
126	334	Washing time during operation	R/W	Fb03
127	335	Washing countdown during operation	R	Fb03
128	336	Washing time due to inactivity	R/W	Fb04
129	337	Washing countdown due to inactivity	R	Fb04
130	338	Total washing time	R/W	Fb05
131	339	Total washing countdown	R	Fb05
132	340	Scheduled wash hours	R/W	Fb06
133	341	Scheduled wash minutes	R/W	Fb06
134	342	Scheduled wash weekday	R/W	Fb06
136	344	Request from BMS serial	R/W	-
139	347	Main board offline time	R/W	Gea05
140	348	Preheat probe alarm delay	R/W	Fa12
143	351	Supervisor control type	R/W	Gd02

Tab. 8.d

8.2 Production control via network

To control production via network it is necessary to prepare the humidifier by setting the following parameters:

- regulation from an external signal on screen Fa01 or by setting the integer Carel retentive variable 111 to 1 (Modbus register 319);
- 0...10 V control signal on screen Fa04 or by setting the integer Carel retentive variable 114 to 3 (Modbus register 322);
- Carel digital 79 (Modbus coil 79) = 1: enables management of the production request from the supervisor via integer Carel variable 135 (Modbus register 344), the latter can be set in the range 0...1000 (0-100.0% production); both variables are saved in volatile memory, therefore they must be set again in the event of a power failure and subsequent re-powering of the electrical panel.

It is also possible to enable/disable the humidifier from the supervisor by setting the following parameters:

- enabling of the on/off command from the supervisor on screen Gd02 or by setting the digital Carel retentive variable 77 to 1 (Modbus coil 77);
- subsequent setting of the digital Carel non-retentive variable 78 (Modbus coil 78): 0 = humidifier enabled, 1 = humidifier disabled.

8.3 Network washing activation

To activate a washing cycle from the supervisor it is necessary:

- prepare the humidifier to receive the purge command from the network via the set on screen Fb02 or via the set to 1 of the Carel digital retentive variable 62 (Modbus coil 62);
- then set the Carel digital variable 63 (Modbus coil 63) to 1, which will remain at 1 for the entire duration of the wash and will be reset automatically at the end of the same.

9. ALARMS

9.1 Types of alarms

There are two types of alarms:
- manual reset;
- automatic reset: the alarm is reset and the unit restarts automatically when the alarm condition is no longer present;

When an alarm occurs, the Alarm button flashes and the display shows the standard display.

Press Alarm to display a short description of the alarm.
Press Alarm again to attempt to reset the alarm:
1. if the cause is no longer present, the alarm should be reset and the red light on the button will go off;
2. if the reset attempt fails, the Alarm button stays on steady, signalling that the alarm has been acknowledged.

If the alarm is reset automatically, the Alarm button goes off and the alarm reset event is recorded in the alarm log.

Example: the high humidity alarm is visible in the list of alarms, and the log shows the activation event (down arrow) and reset event (up arrow).

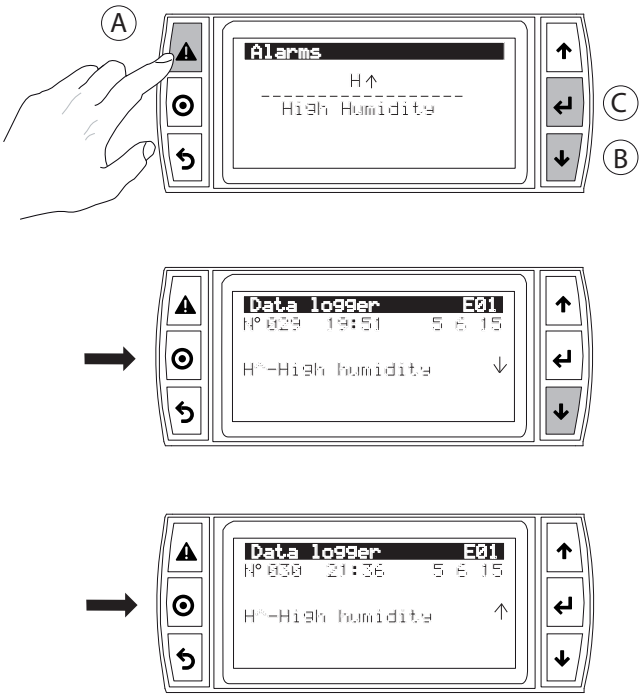

Fig. 9.a

9.2 Alarm table

Source	"Secondary" electr. panel	"Main" electrical panel	Cause	Solution	Alarm relay activation	Action	Reset
Humidifier	2 fast flashes	Et Autotest failed	• Feedwater not connected or insufficient • drain open • float failure	Check: • feedwater and fill valve; • blockage of the filter on the fill solenoid valve; • check drain solenoid valve and drain connection;	yes	humidification stopped	ESC ("Main")
Humidifier	5 fast flashes	EP no production	Piezoelectric transducer malfunction	Perform maintenance on the case	yes	humidification stopped	ESC ("Main")
Humidifier	3 fast flashes	EF no water	Mains water interruption or fill solenoid valve malfunction	Check: • feedwater and fill valve; • blockage of the filter on the fill solenoid valve;	yes (in the 10 minute waiting period)	humidification stopped for 10 minutes only	automatic (after 10 minute wait)
Humidifier	4 fast flashes	Ed drain failure	Drain circuit/solenoid valve malfunction	Check drain valve and drain connection	yes	humidification stopped	ESC ("Main")
Humidifier	5 slow flashes	CL tank maintenance request signal	1500 operating hours exceeded for recommended maintenance	Carry out maintenance on tank and transducers (chap. 10)	no	signal only	Reset hour counter (Geb01)
"Main" panel	-	Ambient probe Probe broken or incorrectly connected	Cable interrupted/ disconnected/incorrectly connected.	Check the reference signal	yes	humidification stopped	AUTO
"Main" panel	-	Limit probe Probe broken or incorrectly connected	Cable interrupted/ disconnected/incorrectly connected.	Check the reference signal	yes	humidification stopped	AUTO

Source	"Secondary" electr. panel	"Main" electrical panel	Cause	Solution	Alarm relay activation	Action	Reset
"Main" panel	-	H ↑ High humidity	The signal from the probe indicates a humidity higher than 80%rH	Check humidity probe signal/cable	yes	signal only	AUTO
"Main" panel	-	H ↓ Low humidity	The signal from the probe indicates a humidity lower than 20%rH	Check humidity probe signal/cable	yes	signal only	AUTO
Humidifier	2 slow flashes	EE EEPROM alarm	EEPROM problems	If the problem persists, contact the CAREL service centre	yes	humidification stopped	If the fault persists, contact service
Humidifier	1 fast flash	E0 Remote unit	Functional test not complete in the factory / EEPROM problems	If the problem persists, contact the CAREL service centre	yes	humidification stopped	If the fault persists, contact service
Humidifier	8 fast flashes	EL Water level alarm	Level too high during atomised water production due to: • fill SV leaks • transducer malfunction	Check: • fill SV • transducers	yes	humidification stopped	AUTO
"Main" panel	-	Offline Remote unit offline	The panel does not detect communication with the remote unit	Check: • serial connection cable • power cable	yes	humidification stopped	AUTO

Tab. 9.a

9.3 Troubleshooting

Note: if the problem identified cannot be solved using the following guide, contact CAREL technical service.

1. Firstly, check the humidifier and the surrounding area.

Problem	Cause		Check	Solution
No atomised water production	Power supply	Humidifier switch in the OFF position	Check the switch	Switch ON
		No power	Measure the voltage at the humidifier input terminals	Connect power
		Power supply fault	Measure the voltage at the power supply output terminals	Replace the power supply
	Feedwater system	Valve closed upstream	Check	Open the valve
The quantity of atomised water is too low	Power supply	Low power supply voltage	Check the voltage at the power supply output terminals	Replace the power supply, if damaged
	Feedwater system	Water level during production is too high and overflowing	Check visually	See table 2)
	Other	The humidifier is not installed horizontally	Check visually	Adjust
No atomised water production	Dust and foreign matter accumulated in the tank (*)			Clean the inside of the tank
	Transducer deterioration		The average life of the transducer is around 10,000 to 15,000 operating hours	Replace
The quantity of atomised water is too low	Dust and foreign matter accumulated in the tank (*)		Visually check the inside of the tank	Clean the inside of the tank and replace the transducers
	Scale build-up on the surface of the piezoelectric transducers (*)			

Tab. 9.b

(*) These malfunctions can be avoided by carrying out preventive maintenance.

2. If the cause has not been identified with the previous checks, there may be faulty components. Check the inside of the humidifier.

Problem	Cause		Check	Solution
No atomised water production	Feedwater system	Float level sensor fault	Empty the tank, remove the electronic board and check continuity of the level sensor	Contact service to replace the level sensor
		Float level sensor blocked		Clean the sensor. If normal operation is not restored, replace
		Fill valve fault	No water filled even when the tank has been emptied	Replace the valve Clean the sensor. If normal operation is not restored, replace
	Other	The fan cables are loose or detached	Check connection after removing the humidifier cover	Restore correct connection to the terminals
The quantity of atomised water is too low	Water level overflow	Float level sensor blocked	If the water level in the tank reaches the overflow pipe, remove the connector from the control board and check continuity of the level sensor	If there is continuity, contact service to replace the level sensor
		Fill valve fault	Water is filled even after switching off the appliance	Replace the fill valve

Tab. 9.c

10. MAINTENANCE AND SPARE PARTS

10.1 Electrical components

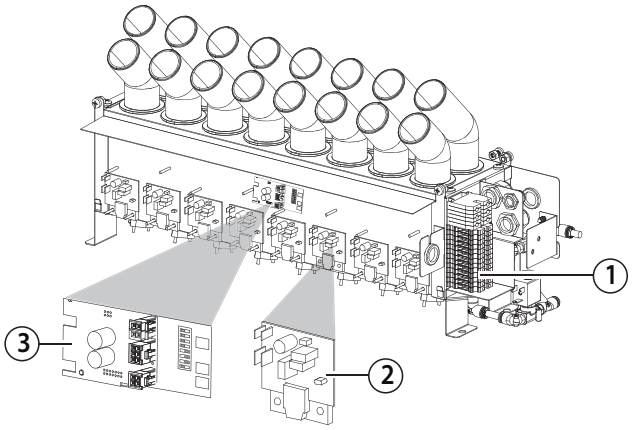

Fig. 10.a

Key:

no.	Description	Spare part no.
1	Terminal block	-
2	Driver board	UUKDE00000
3	Electronic control board	UUF(XY)D0000
4	Secondary/Main control panel power supply	UUKA600010SP for UQ05 - UQ09 control panel UUKA120010SP for UQ18 control panel
5	Secondary/Main control panel Transformer	MCKTR00000SP for all control panel-models UQ
6	Main panel electronic board	UUKI000000
7	Main control panel display	PGNE000F00

Tab. 10.a

(XY) = **02** → 2,4 kg/h (5.3 lbs/h), **05** → 4,8 kg/h (10.6 lbs/h), **07** → 7,2 kg/h (15.8 lbs/h), **09** → 9,6 kg/h (21.1 lbs/h), **14** → 14,4 kg/h (31.7 lbs/h), **18** → 18 kg/h (39.6 lbs/h)

UQ Control Panel

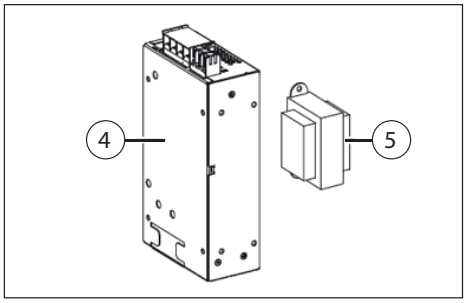

Fig. 10.b

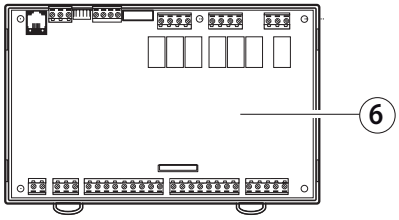

Fig. 10.c

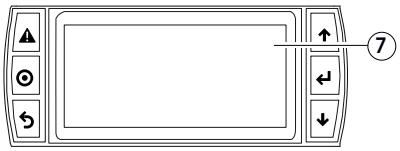

Fig. 10.d

10.2 Mechanical components

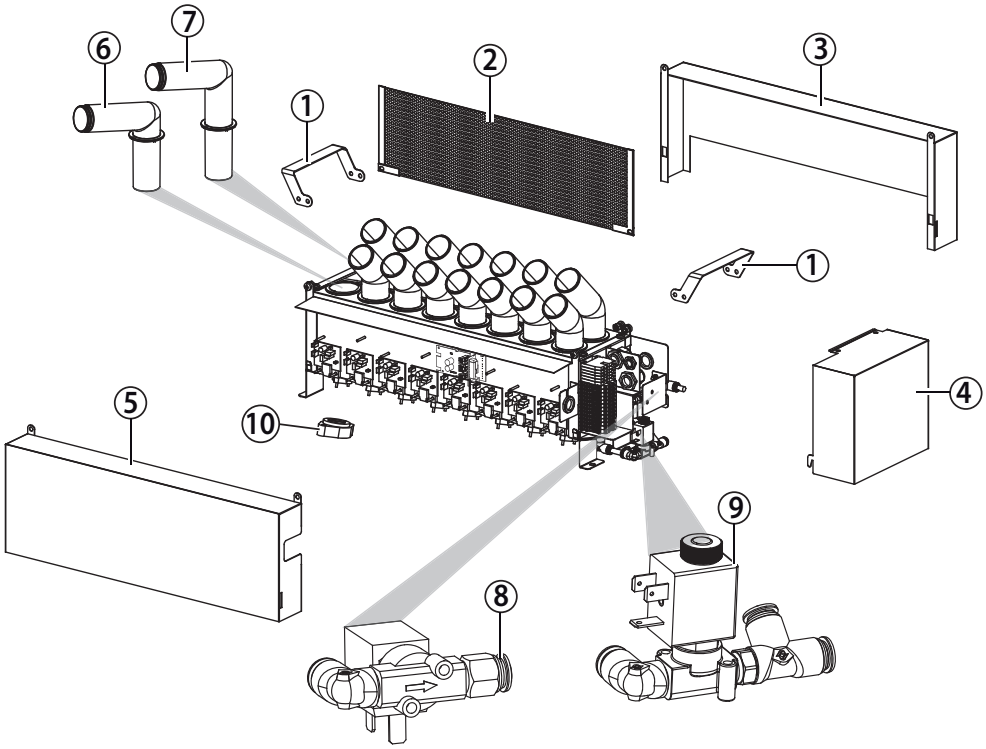

Fig. 10.e

Legenda:

no.	Description	Spare part no.
1	Lifting handle	-
2	Baffle	-
3	Rear cover	-
4	Terminal block cover	-
5	Front cover	-
6	Front diffuser	UUKDA00000
7	Rear diffuser	UUKDR00000
8	Drain solenoid valve kit	UUKDN00000
9	Fill solenoid valve kit	UUKFR00000
10	Piezoelectric transducer	UUKTP00000
11	Sensore di livello interno vasca	UUKLV00000

Tab. 10.b

11

Note: maintenance on the humidifier must be carried out by CAREL technical service or other professionally qualified personnel

10.3 System information

This screen shows the currently installed software revision, the memory usage and the cycle time.

Screen index	Display description	
Gb01	Information	
	FLSTDMHUSU	
	Version	
	Date	Software release date
	Bios	BIOS release date
	Boot	BOOT release date
Gb02	Information	
	Board type	
	Board size	
	Total flash	
	RAM	
	Built-in type	
	Main cycle	
Gb03	Firmware release	
	HW Id	
	Functional test	

Tab. 10.c

10.4 Maintenance

Important: before performing any operations:
- power the unit off at the switch (off) on the control panel;
- empty the water from the tank.

The fill valve is normally closed and the drain valve is normally open, consequently, when powering down the humidifier, the unit is drained automatically.

Note: preventive maintenance on the humidifier is recommended to ensure optimum system performance. Maintenance includes:
- checking tightness of the electrical connectors;
- cleaning and visual inspection of the components;
- checking water level and making sure there are no leaks.

Important:
- the piezoelectric transducer is very delicate: when cleaning the inside of the tank, make sure not to scratch it, for example with a screwdriver;
- tighten the nuts applying the maximum allowed torque (8 ± 0.5 kg·cm). Excessive tightening torque may damage the humidifier.

It is recommended to periodically check operation of the piezoelectric transducers, the corresponding driver boards and the fans, by carrying out a visual inspection:
1. make sure there a water column above each of the piezoelectric transducers during humidifier operation;
2. check that the LEDs on the driver boards are on and are yellow during humidifier operation.

10.5 Maintenance operations

Routine maintenance on humidifiers operating on demineralised water involves cleaning all the parts in contact with the water:
a. fill/drain lines;
b. water tank.

Special maintenance and repairs involve replacement of:
a. fill/drain solenoid valve;
b. driver board;
c. piezoelectric transducer;
d. electronic control board.

10.6 Maintenance intervals

Maintenance intervals depend on water quality and the quantity of atomised water produced. An operating hour counter (effective production) and a unit operating hour counter (total hours) can be set, together with a maintenance hour counter, after which the display shows a warning message. See alarm CL.

Screen index	Display description	Def	Min	Max	UOM
Gc01	Hour counter				
	Work counter	0	0	32767	h
	Machine counter	0	0	32767	h
Gc02	Hour counter				
	Maintenance hours	5000	0	20000	h
	Reminder every	60	0	240	min

Tab. 10.d

Mains water

Water hardness	15…25 °f (150 …250 µS/cm)	25…40 °f (250 to 400 µS/cm)
Daily operating hours	8…10	8…10
Maintenance operations/year	2	3

Tab. 10.e

Demineralised water

The use of demineralised water minimises maintenance requirements.

Note: it is recommended to perform special maintenance and repairs at least once a year, irrespective of the number of operating hours shown on the operating hour counter.

10.7 Replacing the components

To access the load/drain solenoid valve, remove closure on the termianl block-side.

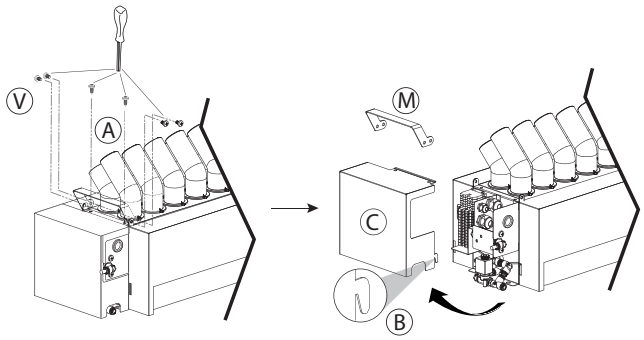

Fig. 10.f

1. loosen and remove the screws (A) and release the cover (C) at point (B) to remove. If necessary, loosen the screws (V) to remove the lifting handle (M).

Drain solenoid valve

1. unplug the electrical connectors and move the spring fasteners so as to remove the hoses, then remove the block (D): elbow connector, drain valve, T-connector.

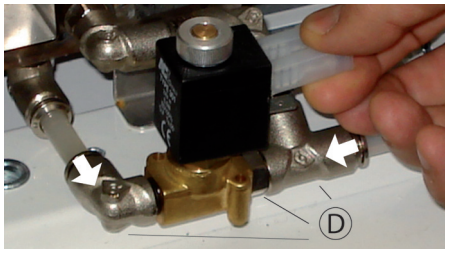

Fig. 10.g

Fill solenoid valve

1. loosen and remove the screws (arrows) so as to remove the bracket (E);

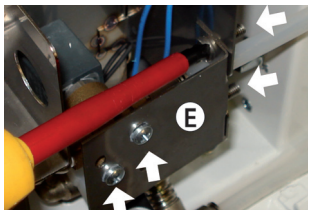

Fig. 10.h

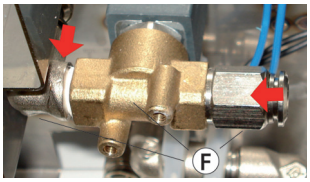

Fig. 10.i

2. unplug the electrical connectors and move the spring fasteners so as to remove the hoses, then remove the block (F): elbow connector, fill valve, connector.

Dismantling the panels (to access the front driver board and the tank)

After having removed the cover (C) on the terminal block, work on the left-hand side and:

1. unscrew the screws (V) that secure the bracket (S) and remove it;
2. loosen the bolts/nuts that fasten the handles (M) and remove them;
3. remove the front (G) and rear (H) panels;
4. finally, lift the cover (D) and the diffusers to access the tank.

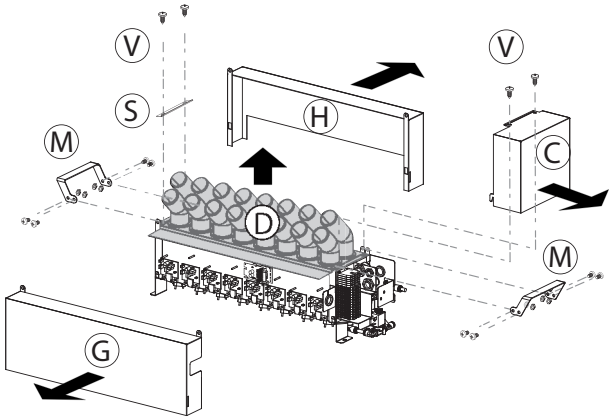

Fig. 10.j

Diffusers

The diffusers are only attached to the top cover. Once the cover has been removed, to replace the diffusers simply lift them off.

Control board and front driver board

Remove the front panel (G) as explained in the previous paragraph.

1. unplug the electrical cables connected to the controller board/driver board;
2. loosen the fastening nuts and remove them with a socket wrench;

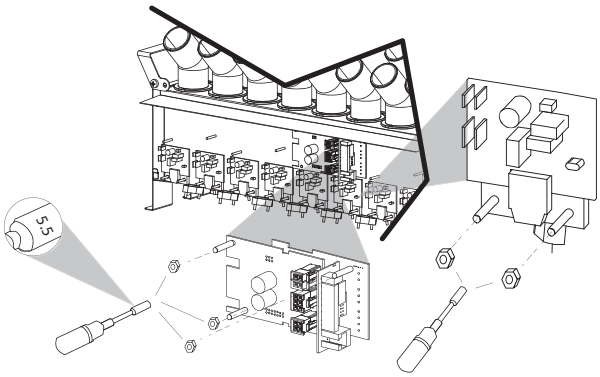

Fig. 10.k

Rear driver board

1. Unscrew the screws and remove the protective panel (P) to access the rear driver board.
2. Remove the boards in the same way as described for the front driver board.

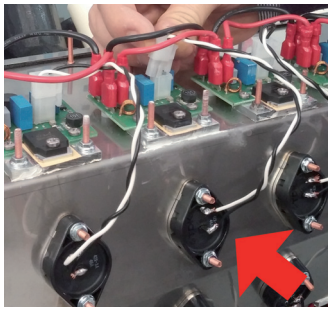

Fig. 10.l

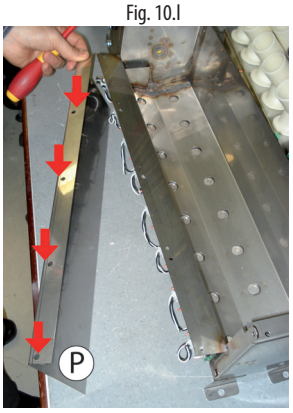

Fig. 10.m

Piezoelectric transducer

Note: the atomisation capacity of the piezoelectric transducer gradually decreases with use. It must be replaced after around 10,000 operating hours (depending on water quality), even if the unit can continue operating while effective capacity still responds to requirements.

To remove the piezoelectric transducer:

1. turn the humidifier body over and identify the piezoelectric transducer to be replaced;
2. unplug the electrical cable terminals from the corresponding driver board;
3. using a socket wrench (5.5), loosen the fastening nuts, remove the transducer and replace it;
4. when replacing the transducer, pay attention to the white markings (arrow): the top line of transducers has the markings on the right, and the bottom line has the markings on the left. The transducer must have the markings positioned in the same ways as the adjacent ones.

Note: the tightening torque of the nuts that fasten the transducer must be 8±0.5 kg cm

Important: if the transducer is fitted rotated 180°; incorrect assembly will cause a reduction in atomised water production and potential humidifier malfunctioning.

Fig. 10.n

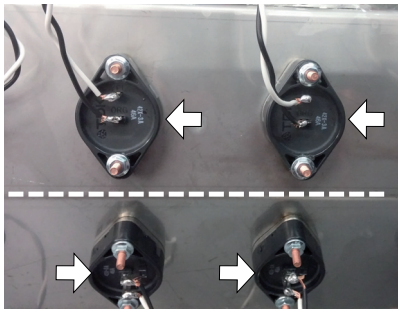

Fig. 10.o

10.8 Cleaning the tank

Proceed as shown previously to remove the side panels and top cover with the diffusers. To clean the tank, use a soft brush.

11. GENERAL FEATURES AND MODELS

11.1 Ultrasonic humidifier models and electrical specifications

The table below summarises the electrical data (power supply voltages) of the various models, as well as their functional characteristics. Note that some models can be powered at different voltages, obviously with different current and atomised water production values.

model	Humidity production [2,3] kg/h (lbs/h)	Power [2] (W)	Panel P/N * = B, D (B = "Secondary", C = "Main")	Power supply Control panel Voltage [1] (V – type)	Control panel Current [2] (A) Vac power supply	Current [2] (A) 48 Vdc power supply control panel output towards UU%D
UU02D%	2,4 (5.3)	210	UQ05*D0000	230	0.7	3.2
		210	UQ05*10000	110	1.5	3.2
UU05D%	4,8 (10.6)	350	UQ05*D0000	230	1.3	6.4
		350	UQ05*10000	110	2.7	6.4
UU07D%	7,2 (15.8)	500	UQ09*D0000	230	2	9.6
		500	UQ09*10000	110	4	9.6
UU09D%	9,6 (21.1)	650	UQ09*D0000	230	2.6	12.8
		650	UQ09*10000	110	5.5	12.8
UU14D%	14,4 (31.7)	950	UQ18*D0000	230	4	19.2
		950	UQ18*10000	110	8.2	19.2
UU18D%	18 (39.6)	1150	UQ18*D0000	230	4.7	24
		1150	UQ18*10000	110	10	24

Tab. 11.a

(1) tolerance allowed on rated mains voltage: -15%, +10%;
(2) tolerance on rated values: +5%, -10% (EN 60335-1);
(3) max rated instant atomised water production: average atomised water production may be affected by external factors, such as: ambient temperature, water quality, distribution system.

⚠ **Important:** to avoid interference, keep power cables separate from probe cables.

11.2 Cable cross-section

See par. "Connection cable sizing: humidifier – electrical panel".

11.3 Technical specifications

Model	UU02D%	UU05D%	UU07D%	UU09D%	UU14D%	UU18D%
Flow-rate kg/h (lbs/h)	2,4 (5.3)	4,8 (10.6)	7,2 (15.8)	9,6 (21.1)	14,4 (31.7)	18 (39.6)
No. of transducers	4	8	12	16	24	30
Rated power (W)	180	330	480	600	1100	1100
Application	duct					
Feedwater pressure bar (psi)	1 to 6 bar (14.5 to 87)					
Feedwater temperature °C (°F)	5 to 40 (41 to 104)					
Ingress protection	IP20					
Electronic controller						
Auxiliary voltage / frequency (V/ Hz)	24V/50 – 60 Hz					
Maximum auxiliary power (VA)	3					
Probe inputs (general features)	Can be selected for these signals: 0-1V, 0-5V, 0...10 V, NTC low temperature: 10 kΩ at 25°C, -50T90 °C;					
Power supply to active probes (general features)	21Vdc, max 150 mA					
Relay outputs (general features for "Main" panel)	EN60730-1: NA 1(1)A 250 Vac cos phi = 0.4; 100,000 cycles UL-873: NO 1 A resistive 24 Vac, 30 Vdc, 100,000 cycles/PILOT DUTY: 24 Vac, peak 15A, continuous 1A 30,000 cycles					
Alarm relay output (general features for "Secondary" panel)	24 V (max 3 W)					
Digital inputs (general features)	Voltage-free contact. Max resistance 100 Ω; max 5 Vdc open, 7 mA closed					
Analogue outputs (general features for "Main" panel)	0 to 5V, 0 to 10V Maximum load 2 kΩ (5 mA) Precision ±3 % of full scale					
Environmental conditions						
Ambient operating temperature °C (°F)	1 to 40 (33.8 to 104)					
Ambient operating humidity (% rH)	10 to 80					

Tab. 11.b

11.4 Fuse table

11.4.1 Electrical panel "Secondary"

Electrical panel P/N	48 Vdc power supply fuse (one 10.3 x 38 fuse)	Power supply fuse (two 5 x 20 fuses)	Fan fuse (one 5 x 20 fuse)
UQ05BD0000	8 A	2 A	250 mA
UQ05B10000	8 A	3.15 A	250 mA
UQ09BD0000	16 A	3.15 A	250 mA
UQ09B10000	15 A	6.3 A	250 mA
UQ18BD0000	25 A	5 A	250 mA
UQ18B10000	25 A	10 A	250 mA

Tab. 11.c

11.4.2 Electrical panel "Main"

Electrical panel P/N	48 Vdc power supply fuse (one 10.3 x 38 fuse)	Power supply fuse (two 5 x 20 fuses)	Fan fuse (one 5 x 20 fuse)
UQ05CD0000	8 A	2 A	250 mA
UQ05C10000	8 A	3.15 A	250 mA
UQ09CD0000	16 A	3.15 A	250 mA
UQ09C10000	15 A	6.3 A	250 mA
UQ18CD0000	25 A	5 A	250 mA
UQ18C10000	25 A	10 A	250 mA

Tab. 11.d

12. MULTI-UNITS INSTALLATION

12.1 Connection Main-Secondary (until 4 humisonics)

In order to optimize the control and management of multiple humidifiers within the same air duct , it is possible to connect them in serial following the diagrams reported on the follow pages. It is necessary to install on the humiSonic "Main", the auxiliary board cod. UUKAX00000 at available space on board the electronic board identified as no. 3 in Fig. 10.a.

Setup

The "Main" unit is able to control the operation of a maximum of 3 "Secondary" units connected via tLan network. For electrical connections refer to diagram in fig.12.1.a and 12.1.b. The Main unit's dipswitches 1-3 must be all set to OFF. Each Secondary unit must be properly configured via the following dip switches:

1: Set to ON for the conversion of the serial port (M11) from 485 to tLan.
2/3: Secondary address, as in following figure:

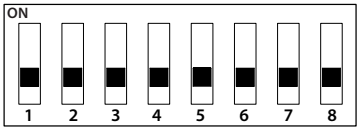

Fig. 12.a

1.	Communication OFF Serial 485 Carel/Modbus ON tLAN
2-3	tLAN address (if 1 is ON)
	OFF/OFF - -
	OFF/ON address 1
	ON/OFF address 2
	ON/ON address 3

Control logic

The Main unit controls each "Secondary" unit, through the following parameters:

- Enable / Disable the operation
- Level of production of atomized water

The control signals (probes / humidistat / external regulator) are read and handled only by the Main who shall then adjust the operation of the Secondary. The production level of the Main is replicated by all the Secondary units.

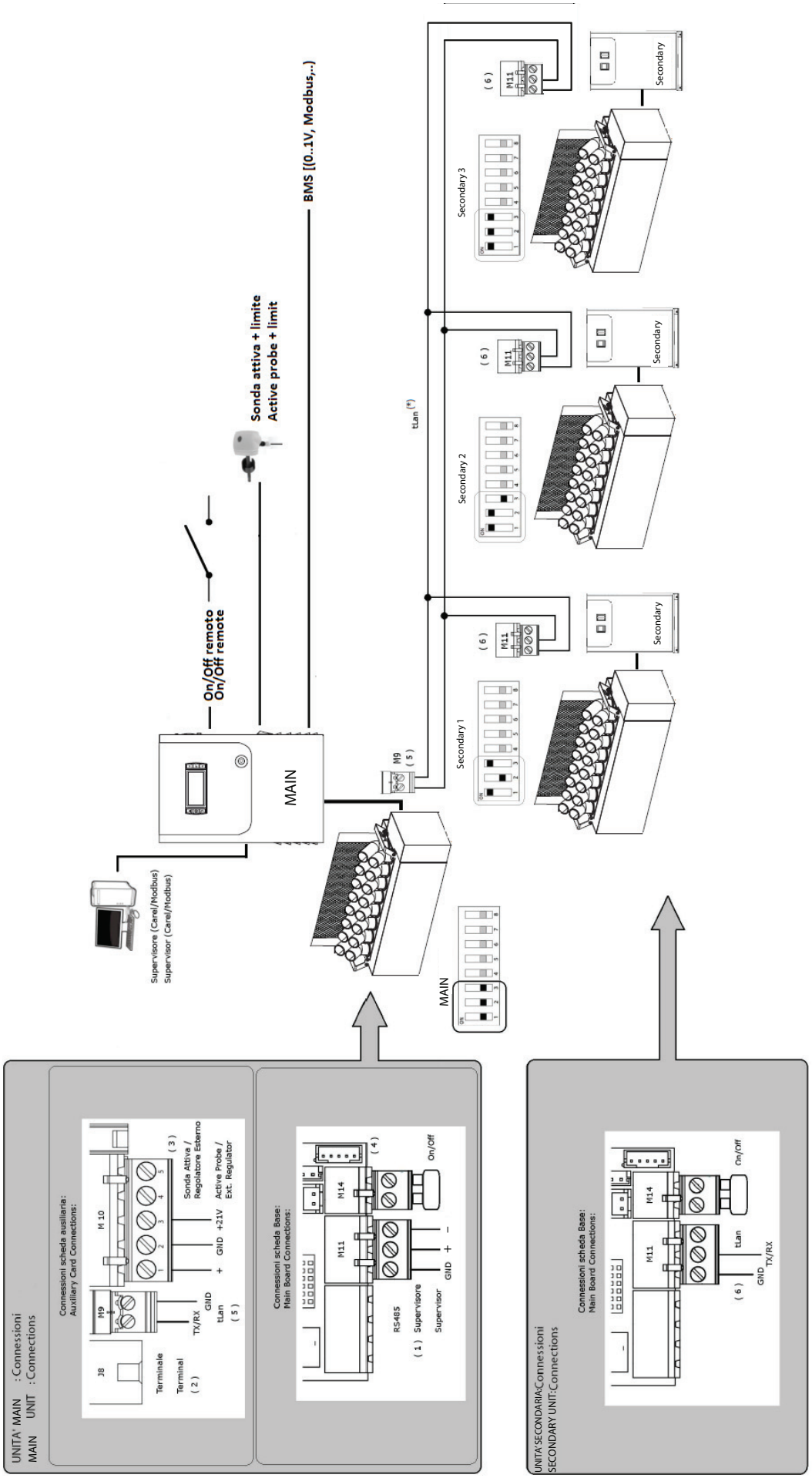
BMS [(0..1V, Modbus,..)
Sonda attiva + limite
Active probe + limit
On/Off remoto
On/Off remote
MAIN
Supervisore (Carel/Modbus)
Supervisor (Carel/Modbus)
tLan (*)
M9
(5)
Secondary 1
Secondary 2
Secondary 3
Secondary
(6)
M11
MAIN
UNITA' MAIN : Connessioni
MAIN UNIT : Connections
Connessioni scheda ausiliaria:
Auxiliary Card Connections:
J8
Terminale
Terminal
(2)
M9
TX/RX
GND
tLan
(5)
M 10
+
GND
+21V
(3)
Sonda Attiva /
Regolatore Esterno
Active Probe /
Ext. Regulator
Connessioni scheda Base:
Main Board Connections:
M11
M14
(4)
On/Off
RS485
(1) Supervisore
Supervisor
GND
+
–
UNITA' SECONDARIA: Connessioni
SECONDARY UNIT: Connections
Connessioni scheda Base:
Main Board Connections:
M11
M14
On/Off
tLan
(6)
GND
TX/RX

Fig. 12.a

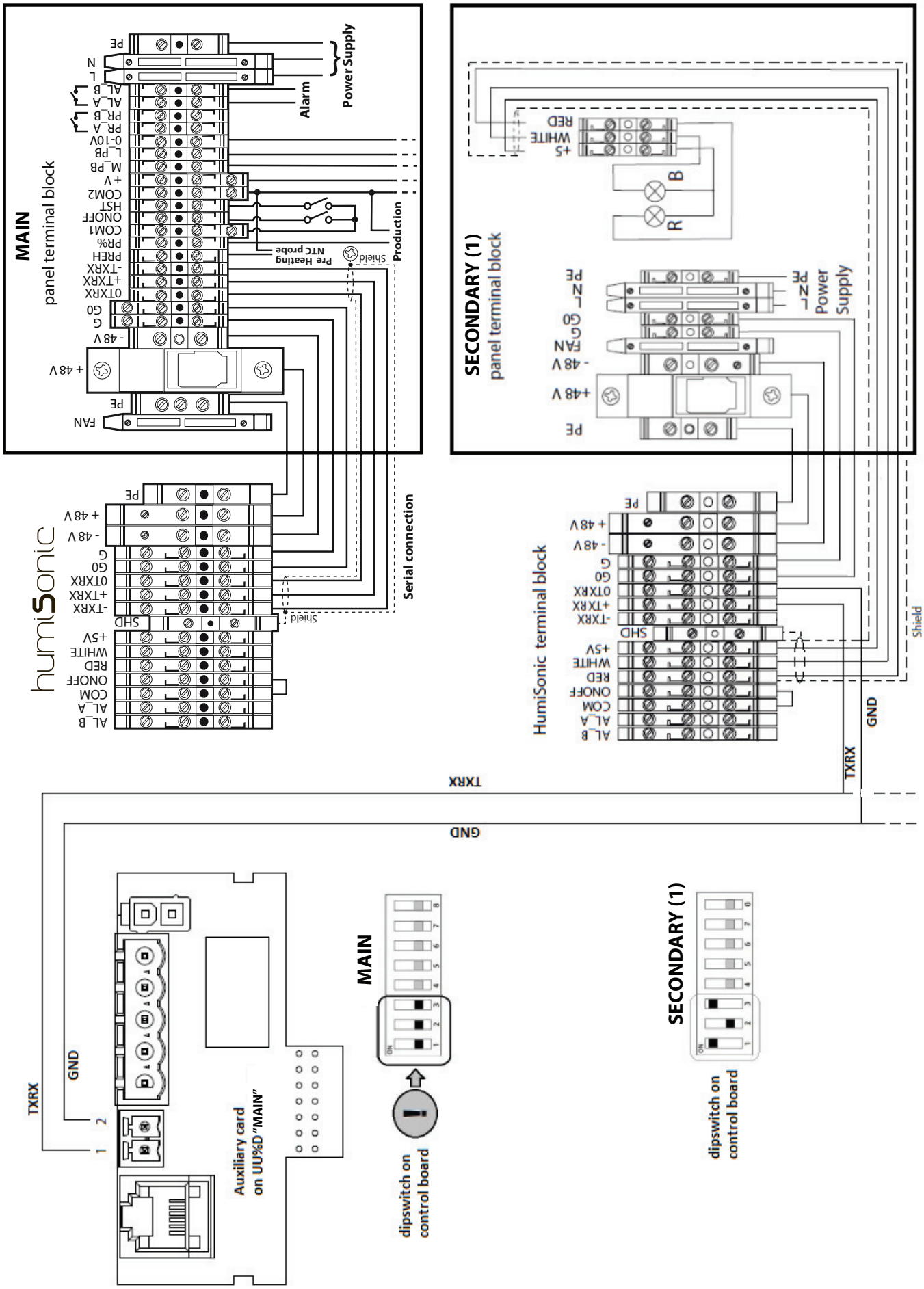
MAIN
panel terminal block
PE
N
L
AL_B
AL_A
PR_B
PR_A
0-10V
L_PB
M_PB
+V
COM2
HST
ONOFF
COM1
PR%
PREH
-TXRX
+TXRX
0TXRX
G0
G
-48V
+48V
PE
FAN
Power Supply
Alarm
Production
Pre Heating NTC probe
Shield
humiSonic
AL_B
AL_A
COM
ONOFF
RED
WHITE
+5V
SHD
-TXRX
+TXRX
0TXRX
G0
G
-48V
+48V
PE
Serial connection
SECONDARY (1)
panel terminal block
+5
WHITE
RED
B
R
PE
N
L
G0
G
FAN
-48V
+48V
PE
Power Supply
HumiSonic terminal block
AL_B
AL_A
COM
ONOFF
RED
WHITE
+5V
SHD
-TXRX
+TXRX
0TXRX
G0
G
-48V
+48V
PE
Shield
GND
TXRX
TXRX
GND
TXRX
GND
1
2
Auxiliary card on UU%D "MAIN"
MAIN
dipswitch on control board
SECONDARY (1)
dipswitch on control board

Fig. 12.b

12.2 Connection multi-Main (until 4 Mains)

When the units to be installed into the same duct are in a high number (5 to 24 units), it is appropriate to follow the diagram in Fig. 12.2.a and 12.2.b Set the type of signal PR% output from the Main 1 panel, either 0-5V and 0-10V (screen Fa14) and set the input signal to the other Main panels accordingly (screen Fa04, Probe type).

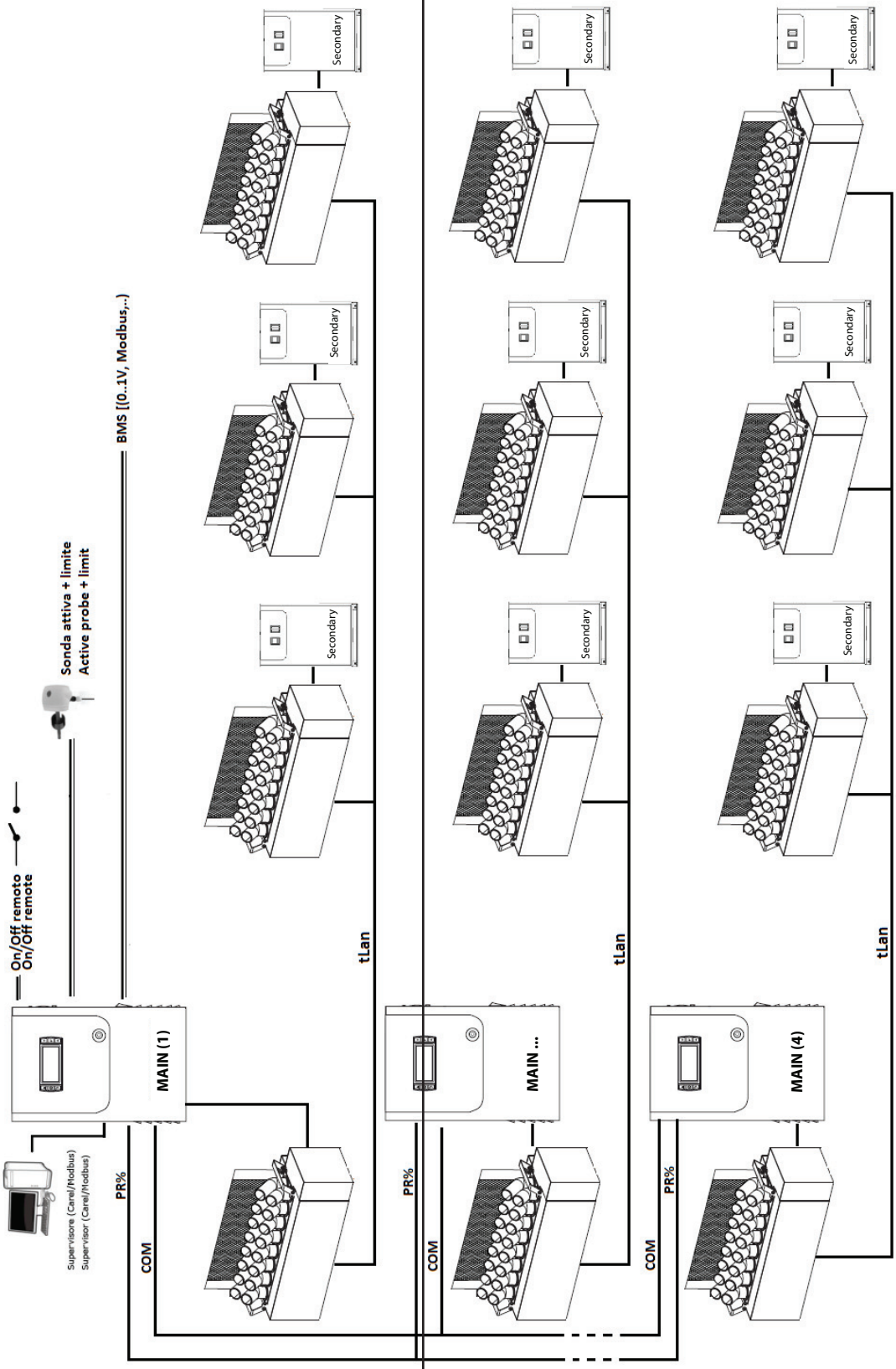

Fig. 12.c

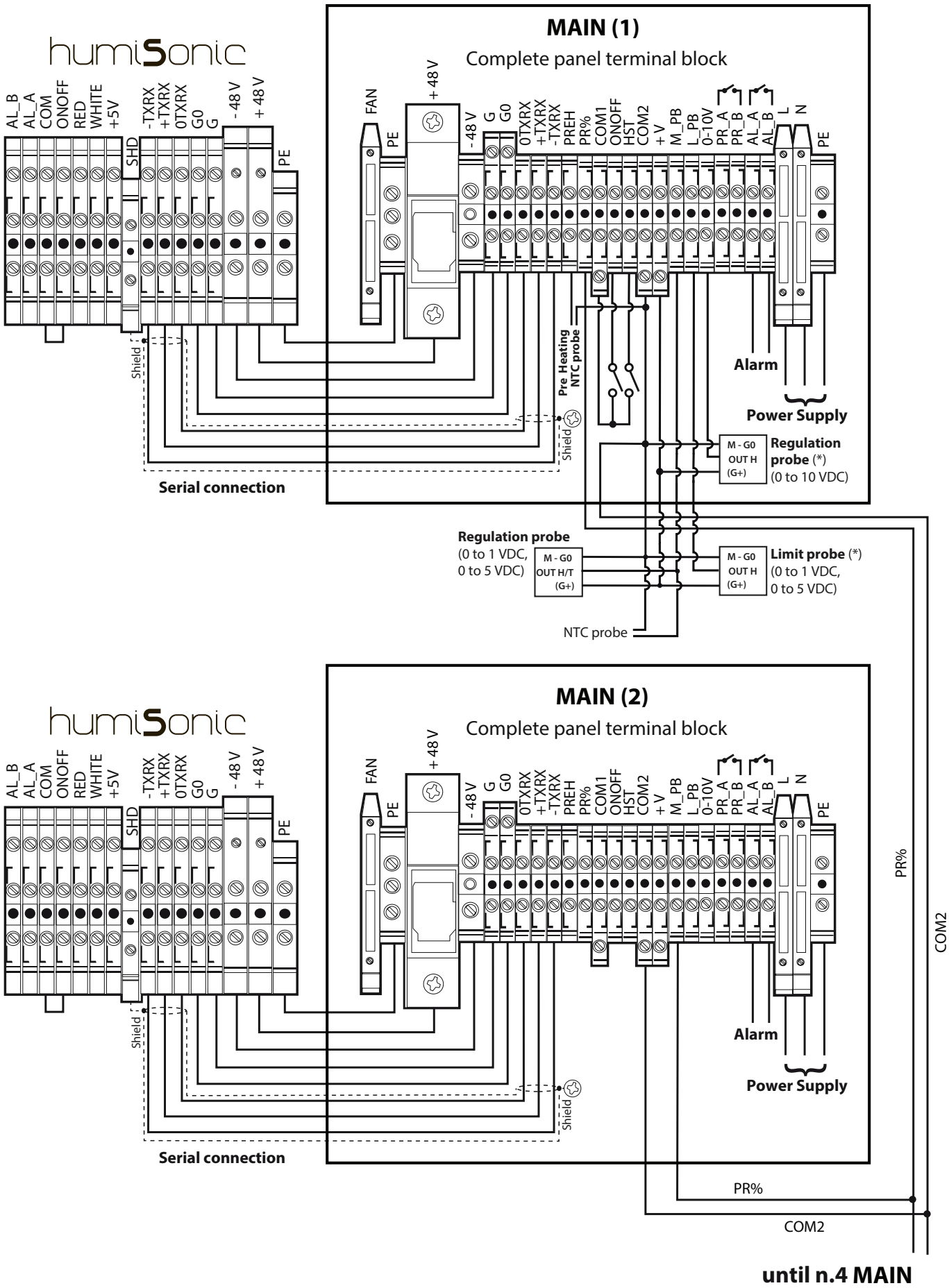
humiSonic
AL_B
AL_A
COM
ONOFF
RED
WHITE
+5V
SHD
-TXRX
+TXRX
0TXRX
G0
G
- 48 V
+ 48 V
PE
Shield
Serial connection
MAIN (1)
Complete panel terminal block
FAN
PE
+ 48 V
- 48 V
G
G0
0TXRX
+TXRX
-TXRX
PREH
PR%
COM1
ONOFF
HST
COM2
+ V
M_PB
L_PB
0-10V
PR_A
PR_B
AL_A
AL_B
L
N
PE
Pre Heating NTC probe
Alarm
Power Supply
M - G0
OUT H
(G+)
Regulation probe (*)
(0 to 10 VDC)
Regulation probe
(0 to 1 VDC,
0 to 5 VDC)
M - G0
OUT H/T
(G+)
M - G0
OUT H
(G+)
Limit probe (*)
(0 to 1 VDC,
0 to 5 VDC)
NTC probe
humiSonic
AL_B
AL_A
COM
ONOFF
RED
WHITE
+5V
SHD
-TXRX
+TXRX
0TXRX
G0
G
- 48 V
+ 48 V
PE
Shield
Serial connection
MAIN (2)
Complete panel terminal block
FAN
PE
+ 48 V
- 48 V
G
G0
0TXRX
+TXRX
-TXRX
PREH
PR%
COM1
ONOFF
HST
COM2
+ V
M_PB
L_PB
0-10V
PR_A
PR_B
AL_A
AL_B
L
N
PE
Alarm
Power Supply
PR%
COM2
PR%
COM2
until n.4 MAIN

Fig. 12.d

13. DUCT INSTALLATION

If several Humisonics are to be installed into the same duct , it is necessary to arrange them within the duct so as to obtain a homogeneous and constant atomization.

Suggested installative layouts are:

- "On line" layout: units are positioned on different levels along the same vertical section. The diagram 13.a shows the minimum distances for humidifiers placement within the same duct. Quotas don't change, even if the deflector used is D as Fig. 1.b.

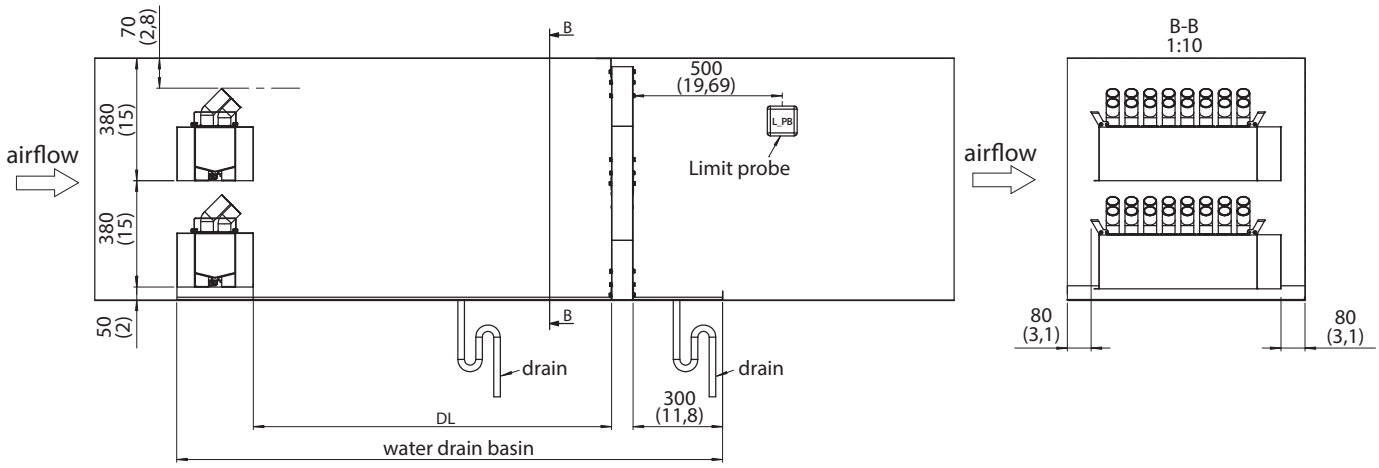

Fig. 13.a

- "Cascade" layout: unitsare positioned on different levels and along different vertical sections. The diagram 13.b shows the minimum distances for humidifiers placement within the same duct. Quotas don't change, even if the deflector used is D as Fig. 1.b.

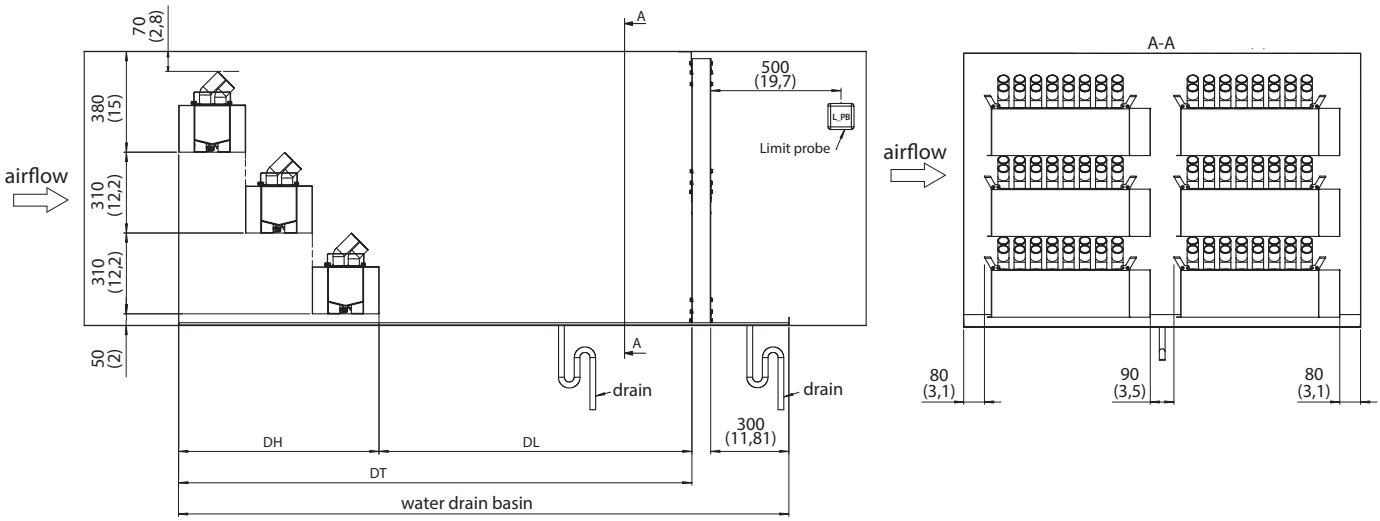

Fig. 13.b

Key:

DH	Humisonics total dimention
DL	Absorption distance
DT	Total length
	For proper sizing and placement of Humisonic within the duct , contact Carel support

CAREL INDUSTRIES HQs
Via dell'Industria, 11 - 35020 Brugine - Padova (Italy)
Tel. (+39) 049.9716611 - Fax (+39) 049.9716600
e-mail: carel@carel.com - www.carel.com

Agenzia / *Agency*:

"humiSonic ventilation" +0300063EN - rel. 1.5 - 04.12.2024